BAR OR CABLE PRIMARY CURRENT TRANSFORMERS TA301-7 / P80-17 SERIES

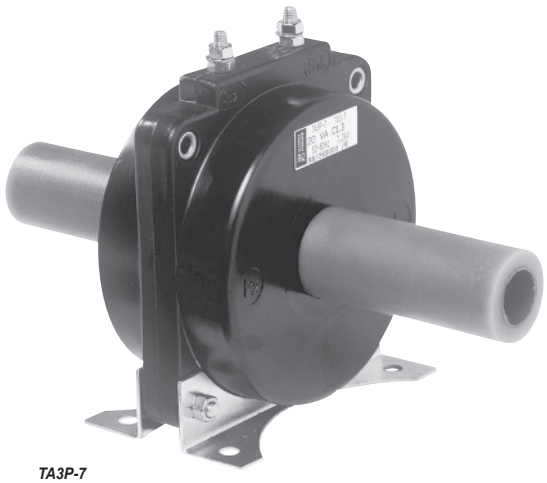

TA3P-7

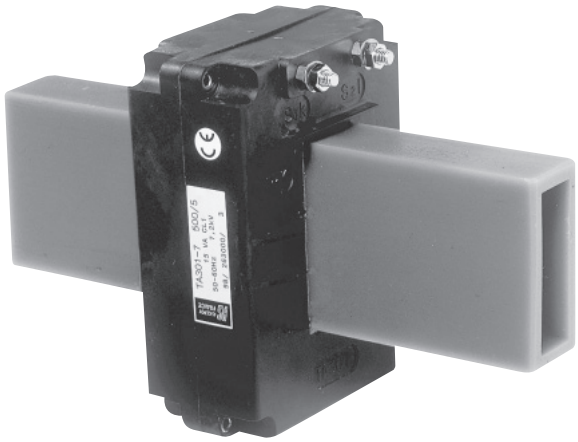

TA301-7

- ***Indoor***
- ***7.2 - 12 - 17.5 kV***
- ***Primary current from 40 to 8000A***
- ***Ith up to 600 Ipn***
- ***Low cost range***

Current transformers for the measurement of AC currents from 40 to 8000A.

This low cost range combines a low voltage current transformer and an insulating epoxy tube.

Technical data

Rated insulation level	7.2/20/60 kV to 17.5/38/95 kV
rimary current Ipn	40 to 8000 A
Secondary current Isn	5 or 1 A
Frequency	50 or 60 Hz
Rated output	1 to 100 VA
Accuracy class	0.1 - 0.2 - 0.2S - 0.5 - 0.5S - 1 - 3 - 5P - 10P - clX
Accuracy limit factor	5 - 10 - 15 - 20 - 30
Continuous thermal current	1.2 Ipn
Short-time thermal current Ith	40 to 600 Ipn
Dynamic current Idyn	2.5 Ith
Insulation class	E
Ambient temperature	-25 °C to + 40°C
Standards	IEC - IEEE - CSA - AS - BS
Dimensions	Up to 500mm maximum. Specific dimension indicated on the offer.

Other characteristics on request

Secondary current Isn	0.005 to 10 A
Double ratio	By secondary tapping
Multiple cores	Up to 2 separate cores
Ambient temperature	-40 °C to +70 °C

Accessories / Options

Mounting brackets
Sealable terminal cover

BAR OR CABLE PRIMARY CURRENT TRANSFORMERS TA301-7 ~ P80-17 SERIES

Selection table

Ip A	Type 7.2 kV	12 kV	17.5 kV	Output maximum VA cl 3	cl 1	cl 0.5
40	TA3P-7	TA3P-7	TA3P-17	5	-	-
	P80-7	P80-7	P80-17	2.5	-	-
50	TA3P-7	TA3P-7	TA3P-17	5	1.25	-
	P80-7	P80-7	P80-17	2.5	-	-
60	TA3P-7	TA3P-7	TA3P-17	10	2.5	-
	P80-7	P80-7	P80-17	5	1.25	-
75	TA3P-7	TA3P-7	TA3P-17	15	3.75	-
	P80-7	P80-7	P80-17	5	2.5	-
100	TA3P-7	TA3P-7	TA3P-17	20	10	5
	P80-7	P80-7	P80-17	15	3.75	1.25
	TA301-7	TA301-7	TA301-17	10	1.25	-
	TA321-7	TA321-7	TA321-17	10	2.5	-
	TA34-7	TA34-7	TA34-17	10	1.25	-
125	TA3P-7	TA3P-7	TA3P-17	30	10	5
	P80-7	P80-7	P80-17	20	5	2.5
	TA301-7	TA301-7	TA301-17	15	5	-
	TA321-7	TA321-7	TA321-17	15	3.75	-
	TA34-7	TA34-7	TA34-17	10	3.75	1.25
150	TA3P-7	TA3P-7	TA3P-17	45	20	10
	P80-7	P80-7	P80-17	20	10	5
	TA301-7	TA301-7	TA301-17	15	5	-
	TA321-7	TA321-7	TA321-17	20	7.5	1.25
	TA34-7	TA34-7	TA34-17	15	5	2.5
200	TA3P-7	TA3P-7	TA3P-17	45	30	20
	P80-7	P80-7	P80-17	45	20	5
	TA301-7	TA301-7	TA301-17	20	10	5
	TA321-7	TA321-7	TA321-17	20	10	5
	TA34-7	TA34-7	TA34-17	20	10	5
250	TA3P-7	TA3P-7	TA3P-17	60	45	30
	P80-7	P80-7	P80-17	45	20	10
	TA301-7	TA301-7	TA301-17	30	20	10
	TA321-7	TA321-7	TA321-17	30	20	7.5
	TA34-7	TA34-7	TA34-17	30	10	5
300	TA3P-7	TA3P-7	TA3P-17	60	60	45
	P80-7	P80-7	P80-17	45	30	15
	TA301-7	TA301-7	TA301-17	30	20	15
	TA321-7	TA321-7	TA321-17	30	15	10
	TA34-7	TA34-7	TA34-17	30	20	10
400	TA3P-7	TA3P-7	TA3P-17	60	60	60
	P80-7	P80-7	P80-17	60	45	20
	TA301-7	TA301-7	TA301-17	60	30	20
	TA321-7	TA321-7	TA321-17	45	30	20
	TA34-7	TA34-7	TA34-17	45	20	15
	TA316-7	TA316-7	60	30	30	
500	TA3P-7	TA3P-7	TA3P-17	60	60	60
	P80-7	P80-7	P80-17	60	60	45
	TA301-7	TA301-7	TA301-17	60	45	30
	TA321-7	TA321-7	TA321-17	45	30	20
	TA34-7	TA34-7	TA34-17	60	45	30
	TA316-7	TA316-7	60	45	30	
600	TA3P-7	TA3P-7	TA3P-17	60	60	60
	P80-7	P80-7	P80-17	60	60	45
	TA301-7	TA301-7	TA301-17	60	45	30
	TA321-7	TA321-7	TA321-17	60	45	30
	TA34-7	TA34-7	TA34-17	60	45	30
	TA316-7	TA316-7	60	45	30	
750 to 800	P80-7	P80-7	P80-17	60	60	45
	TA301-7	TA301-7	TA301-17	60	60	45
	TA321-7	TA321-7	TA321-17	60	45	30
	TA34-7	TA34-7	TA34-17	60	45	30
	TA316-7	TA316-7		60	60	45
1000	P80-7	P80-7	P80-17	60	60	45
	TA301-7	TA301-7	TA301-17	60	60	45
	TA321-7	TA321-7	TA321-17	60	45	45
	TA34-7	TA34-7	TA34-17	60	60	60
	TA316-7	TA316-7		60	60	45
1250	P80-7	P80-7	P80-17	60	60	45
	TA301-7	TA301-7	TA301-17	60	60	45
	TA321-7	TA321-7	TA321-17	60	60	45
	TA34-7	TA34-7	TA34-17	60	60	60
	TA312-7	TA312-7	TA312-17	60	60	60
	TA316-7	TA316-7	-	60	60	60
1500	P80-7	P80-7	P80-17	60	60	45
	TA301-7	TA301-7	TA301-17	60	60	45
	TA321-7	TA321-7	TA321-17	60	45	45
	TA34-7	TA34-7	TA34-17	60	60	60
	TA312-7	TA312-7	TA312-17	60	60	60
	TA316-7	TA316-7	-	60	60	60
2000	P80-7	P80-7	P80-17	60	60	45
	TA34-7	TA34-7	TA34-17	60	60	60
	TA312-7	TA312-7	TA312-17	60	60	60
	TA316-7	TA316-7	-	60	60	60
2500	TA34-7	TA34-7	TA34-17	60	60	60
	TA312-7	TA312-7	TA312-17	60	60	60
	TA316-7	TA316-7	-	60	60	45
3000	TA312-7	TA312-7	TA312-17	60	60	60
4000	TA312-7	TA312-7	TA312-17	60	60	60
5000 to 8000	TA312-7	TA312-7	TA312-17	60	60	60

Dimensions

Type	A mm	B mm	C mm	D mm	E mm	F mm	G mm	H * mm	J * mm	K mm	L * mm	M mm	Primary conductor bar or Ø
TA301-7	88	123	216 (1)	52	16	69	63	65	72	30	-	15	1 to 2 bars 50x5
TA316-7	155	155	280 (1)	52	52	84	65	80	100	30	-	15	1 to 3 bars 50x10
TA321-7	87	144	300 (1)	70	16	81	85	72	114	20	-	15	1 bar 60x15
TA34-7	137	190	300 (1)	85	20	88	103	80	110	30	-	15	1 to 2 bars 80x5
TA312-7	226	209	280 (1)	85	102	90.5	105	100	90	40	-	15	1 to 2 bars 100x20
TA3P-7	104	112	200 (1)	86	18	66	30	56	72	35	42	15	Ø 16
P80-S7	150	150	280 (2)	137	18	75	30	56	113	30	44	15	Ø 16
P80-7	150	150	310 (2)	137	60	75	80	56	128	30	44	15	Ø 50
TA301-17	88	123	500	44	8	69	63	65	214	30	-	15	1 bar 40x8
TA321-17	87	144	500	70	12	81	85	72	214	20	-	15	1 bar 60x8
TA34-17	137	190	500	85	20	101	103	80	210	30	-	15	1 to 2 bars 80x5
TA312-17	226	209	500	85	102	111	105	100	200	40	-	15	1 to 2 bars 100x20
TA 3P-17	104	112	430	86	18	66	40	56	192	35	42	15	Ø 18
P80-S17	150	150	430	137	18	75	40	56	193	30	44	15	Ø 18
P80-17	150	150	500	137	50	75	80	56	223	30	44	15	Ø 45

*Dimensions H, J, L can vary according to electrical performances (spacer)
(1) up to 500mm maximum. Specific size to be quoted on offer
(2) up to 430mm maximum. Specific size to be quoted on offer

• Tightening torque terminal M5 : 2 N.m

TA...

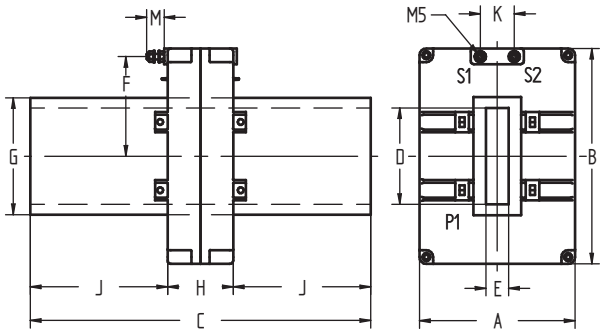
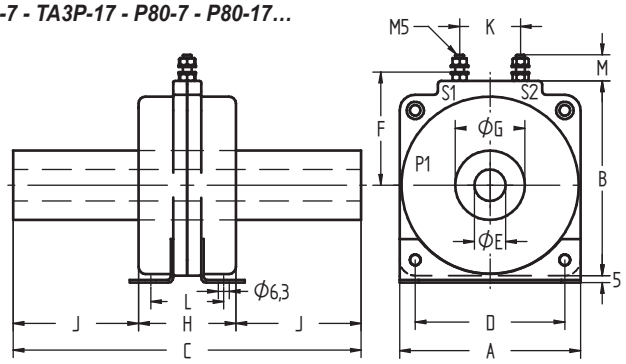
TA3P-7 - TA3P-17 - P80-7 - P80-17...