SINGLE PHASE 2-POLE VOLTAGE TRANSFORMER - RT SERIES

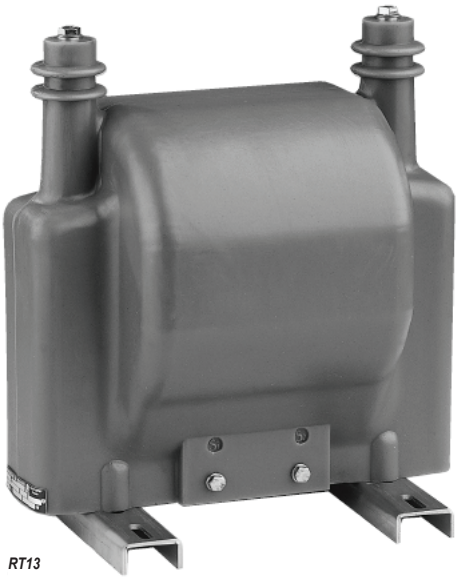

RT13

RT12

- ***indoor***
- ***3.6 - 7.2 - 12 - 17.5 - 24 - 36 kV***
- ***High performance characteristics***

Double pole voltage transformers vacuum moulded in self extinguishing epoxy resin for the measurement of AC voltages between phases up to 36kV, with rated outputs up to 200VA CL0.2 or 300VA CL0.5.

This range is also suitable for the power supply of auxiliairies up to 5000VA CLA.

Technical data

Rated insulation level	3.6/16/45 kV to 36/70/170 kV
Primary voltage Upn	Up to 36.000 V
Secondary voltage Usn	100 - 110 V
Frequency	50 or 60 Hz
Rated output	Up to 200 VA CL 0.2 - 300 VA CL 0.5 - 500 VA CL1
Accuracy class	0.1 - 0.2 - 0.5 - 1 - 3 - 3P - 6P
Voltage factor	1.2 Upn continuously
Thermal limiting output	Up to 5000 VA
Insulation class	E
Ambient temperature	- 25°C to + 45°C
Standards	IEC - IEEE - CSA - AS - BS

Other characteristics on request

Secondary voltage Usn	10 to 600 V
Voltage factor	1.9 Upn 8h if used as single pole
Secondary windings	Up to 3 secondary windings
Ambient temperature	- 40°C to + 70°C

SINGLE PHASE 2-POLE VOLTAGE TRANSFORMER - RT SERIES

Model	Un	Up	Max rated output VA			Thermal output
	kV	kV	CL0.5	CL1	CL3	VA
RT12	17.5/38/95	Up to 15	100	200	600	Up to 1000
RT13	24/50/125	Up to 22	75	150	500	Up to 750
RT15	24/50/125	Up to 22	150	250	1000	Up to 1500
RT26	36/70/170	Up to 35	300	500	2000	Up to 4000
RT27	36/70/170	Up to 35	300	500	2000	Up to 5000

Model	Weight kg	A mm	B mm	C mm	D mm	E mm	F mm	G mm	H mm	J mm	I mm	Q mm
RT12	24	220	323	205	300	180	190	180	55	40	8	67
RT13	24	220	323	205	300	220	190	180	55	30	8	66
RT15	36	220	323	210	350	203	300	180	50	40	8	60
RT26	92	236	415	265	417	300	305	196	50	40	8	108
RT27	97	236	435	310	420	345	305	196	58	50	8	108

RT12 - RT13 - RT15

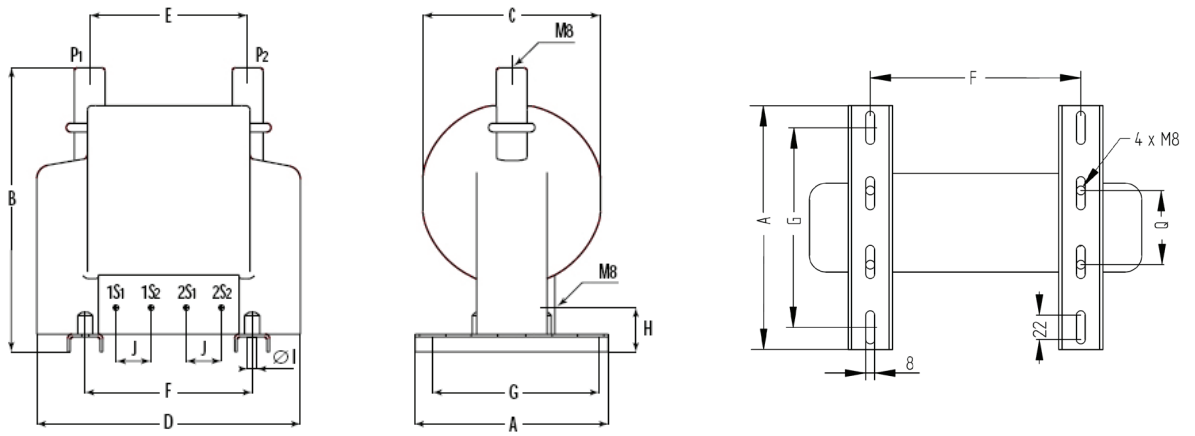

RT26 - RT 27

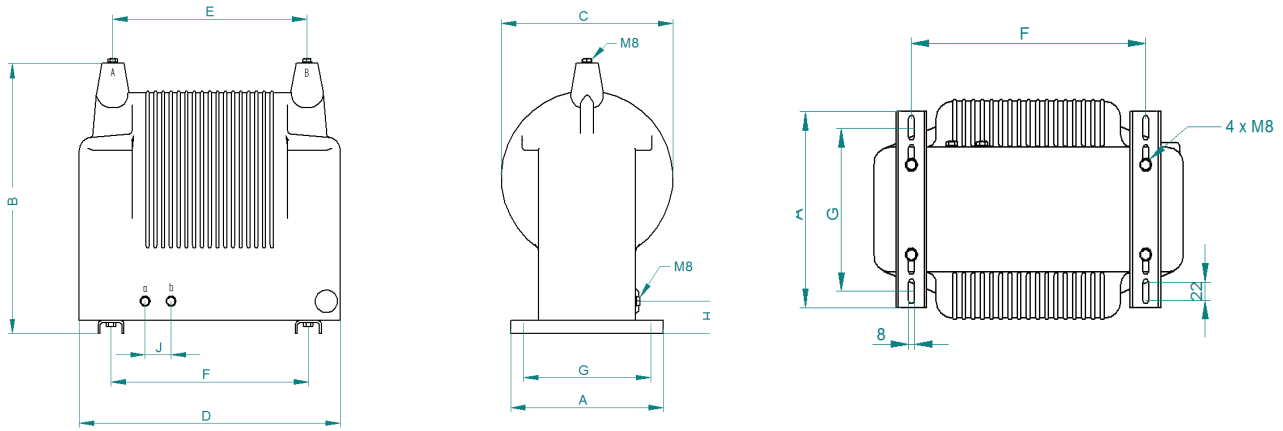

Installation: Tightening torque

terminal M8 : 13N.m