BAR OR CABLE PRIMARY CURRENT TRANSFORMERS RC SERIES

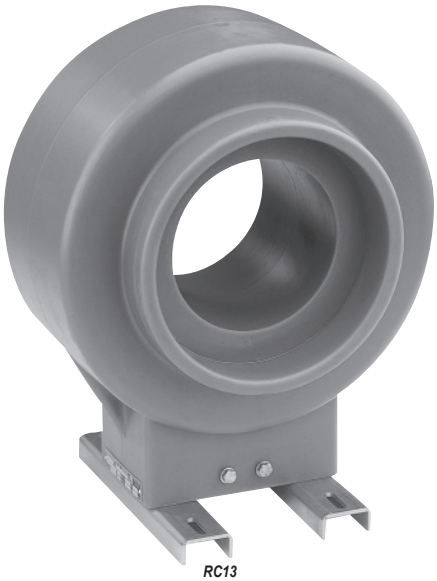

RC13

RC16

- ***Indoor***
- ***7.2 - 12 - 17.5 - 24 kV***
- ***Primary current from 50 to 12000 A***
- ***Ith up to 1000 Ipn or 100 kA.1s***
- ***Cast-resin insulated***
- ***Up to 4 separate cores.***

Current transformers vacuum moulded in self extinguishing epoxy resin for the measurement of AC currents from 50 to 12000A. This range is particularly suitable for the measurement of high currents.

Technical data

Rated insulation level	7.2/20/60 kV to 24/50/125 kV
Primary current Ipn	50 to 12000 A
Secondary current Isn	5 or 1 A
Frequency	50 or 60 Hz
Rated output	1 to 100 VA
Accuracy class	0.1 - 0.2 - 0.2S - 0.5 - 0.5S - 1 - 3 - 5P - 10P - clX
Accuracy limit factor	5 - 10 - 15 - 20 - 30
Continuous thermal current	1.2 Ipn
Short-time thermal current Ith	80 to 1000 Ipn
Dynamic current Idyn	2.5 Ith
Insulation class	E
Ambient temperature	- 25 °C to + 40 °C
Standards	IEC - IEEE - CSA - AS - BS

Other characteristics on request

Secondary current Isn	0.005 to 10 A
Multi-ratio	By secondary tapping
Multiple cores	Up to 4 separate cores
Ambient temperature	- 40°C to + 70°C

Accessories/Options

HV primary screen (see installation)

Selection table and dimensions

Type	Un kV	Weight kg	A mm	B mm	C mm	D mm	E mm	F mm	G mm	H mm	J mm	K mm	L mm
RC5	12/28/75	17	230	190	140	185	300	106	35	25	135	115	155
RC12	17.5/38/95	27	304	210	140	225	377	180	35	30	160	115	155
RC13	17.5/38/95	36	304	210	140	225	377	130	35	30	160	115	155
RC13-100	17.5/38/95	36	304	210	140	225	377	100	35	30	160	115	155
RC14	17.5/38/95	33	304	210	140	225	377	140	35	30	160	115	155
RC15	17.5/38/95	18	230	210	140	265	380	106	45	40	135	115	155
RC16	24/50/125	22	254	210	140	293	420	130	40	25	135	115	160
RC17-106	24/50/125	66	346	240	160	335	508	105	40	30	160	120	160
RC17	24/50/125	60	346	240	160	335	508	130	50	30	160	120	160
RC20	24/50/125	85	425	240	180	395	610	200	40	25	165	180	220
RC21	24/50/125	75	425	240	180	395	610	250	40	25	165	180	220

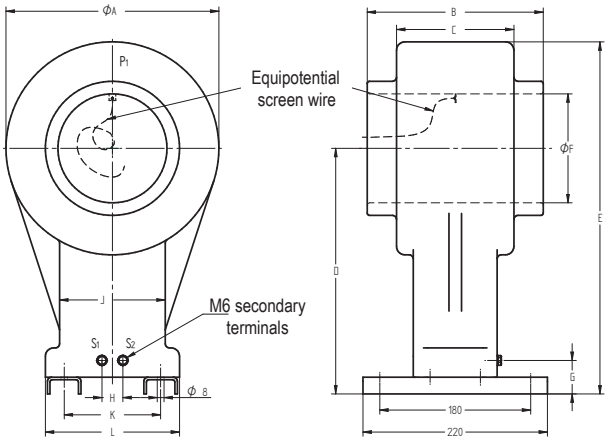

Installation

• At 24kV, it is advisable to use a round primary conductor, with a maximum diameter of 100 mm, and centered in the window. A bar may be used provided that its edges are rounded.

• When equipped with, the HV primary screen wire must be connected to the HV busbar.

• Tightening torque terminal M6 : 6 N.m.