SINGLE PHASE 2 POLE PLUG-IN VOLTAGE TRANSFORMER INDOOR - SECONDARY VOLTAGE TAPS - U24G71A

U24G71A

- ***Indoor***
- ***3.6 - 7.2 - 12 - 17.5 - 24 kV***
- ***Primary voltage up to 24kV***
- ***Auxilary power up to 10kVA***
- ***Secondary setting***

2-pole voltage transformer isolated in self-extinguishing molded epoxy resin to provide auxiliary power up to 10kVA in closed installation, away from people (cubicle, concrete/skid compartment...)

This transformer is equipped with two type A 250A plug-in quick connectors. The user connects with two insulated cables equipped with a standardized plug.

From secondary side, tapping is available to keep required voltage output.

Technical data

Rated insulation level	From 3.6/16/45 kV to 24/50/125 kV
Primary voltage Upn	Up to 24kV
Secondary voltage Usn	100 - 110 - 120 - 220 - 230 V
Frequency	50 or 60 Hz
Voltage factor	1.05 Upn
Thermal limiting output	4 - 5 - 8 - 10 kVA
Insulation class	E
Ambient temperature	- 5°C to + 40°C / 25°F to 100°F
Standards	CEI - IEEE - CSA - AS - BS - UNE

Other characteristics on request

Secondary voltage Usn	From 100 to 600 V
Ambient temperature	From - 25°C to + 70°C / -13°F to + 160°F
Secondary setting	+/-2.5% +/-5%

SINGLE PHASE 2-POLE PLUG-IN VOLTAGE TRANSFORMERS - INDOOR - SECONDARY VOLTAGE TAPS - U24G71A

Dimensions and rated output

Type	A mm	B mm	C mm	D mm	M Weight (kg)	Rated output Max VA
U24G71A	600	350	636	420	190	**10 000**

Type A plug-in voltage transformer
On request : voltage setting by secondary taps

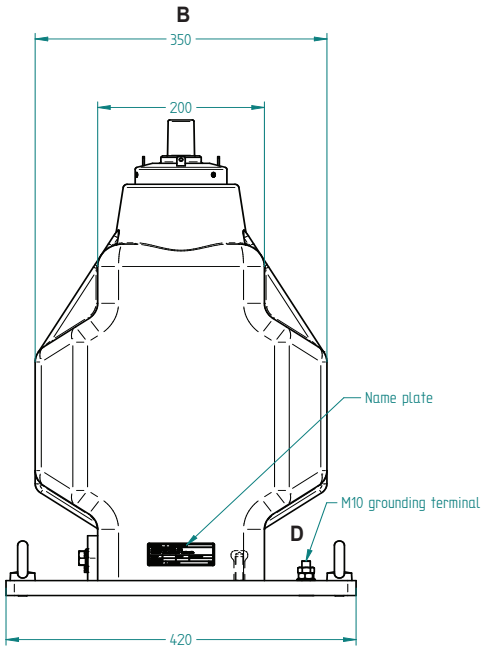

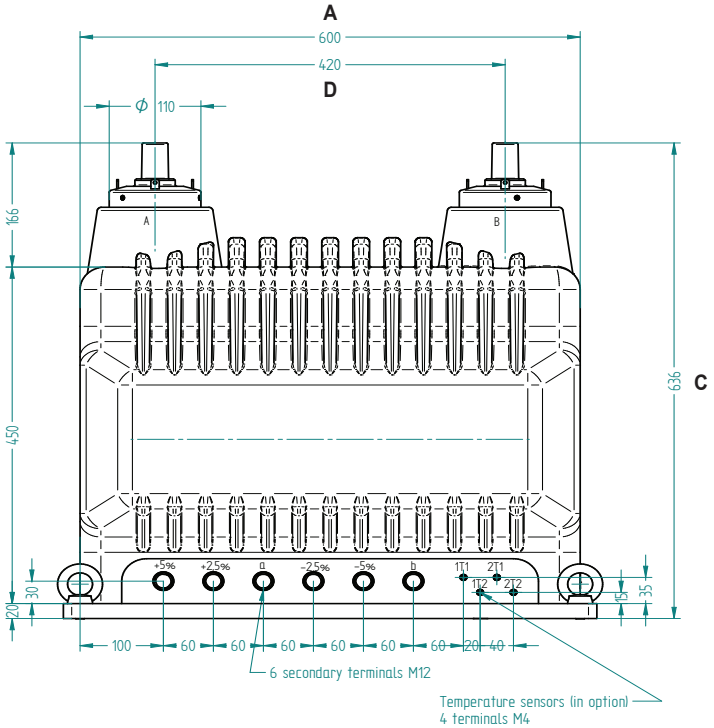

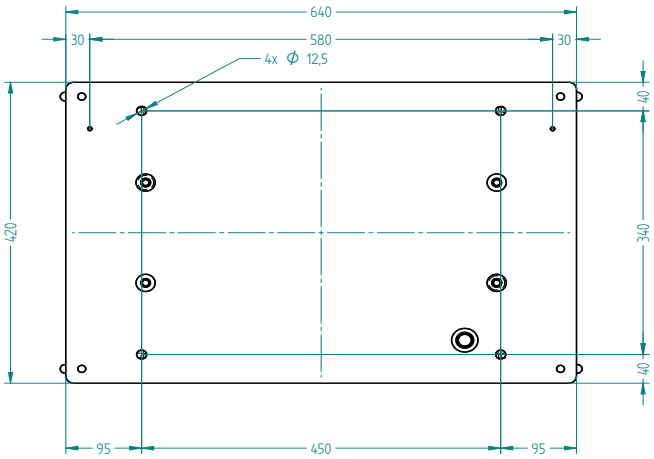

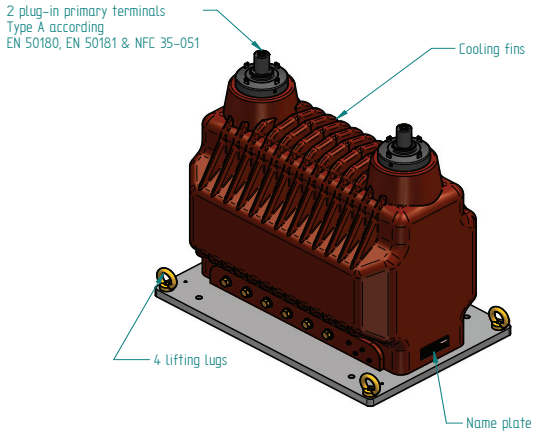

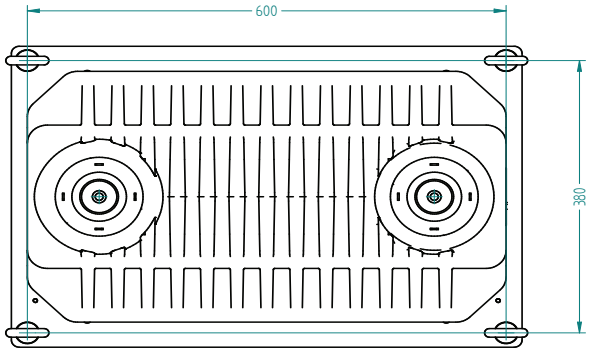
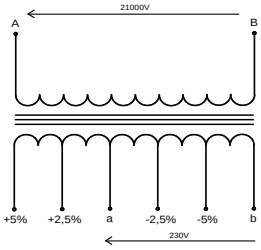
Connexion diagram
(With optional secondary taps)