OUTDOOR SINGLE PHASE VOLTAGE TRANSFORMER SINGLE OR DOUBLE POLE - RM..E - RU..E SERIES

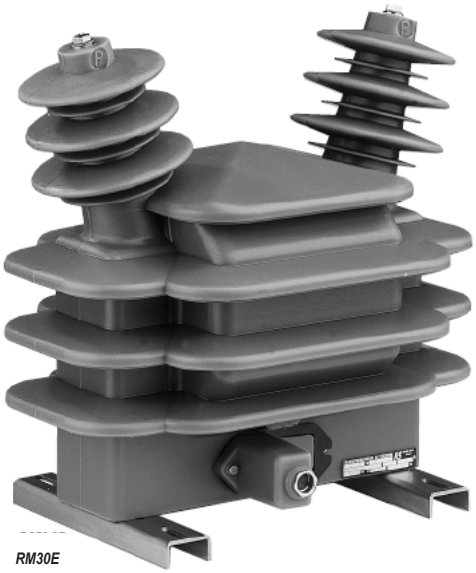

RM30E

RU12E

- ***Outdoor***
- ***Single or double pole***
- ***3.6 - 7.2 - 12 - 17.5 - 24 - 36 kV***

Outdoor single or double pole voltage transformers vacuum moulded in self extinguishing epoxy resin for the measurement of AC voltages between phases or between phase and earth up to 36kV, with rated output up to 50 VA CL0.5 or 100 VA CL1.

The secondary terminals are protected by a weatherproof cover.

This range is also suitable for the power supply of auxiliairies up to 2500 VA CLA.

Technical data

Rated insulation level	3.6/16/45 kV to 36/70/170 kV
Primary voltage Upn	Up to 36 000 V
Secondary voltage Usn	100 - 110 V
Frequency	50 or 60 Hz
Rated output	Up to 50 VA CL 0.5 - 100 VA CL1 - 300 VA CL 3
Accuracy class	0.1 - 0.2 - 0.5 - 1 - 3 - 3P - 6P
Voltage factor	1.9 Upn-30s for single pole 1.2 Upn continuous
Thermal limiting output	Up to 2 500 VA
Insulation class	E
Ambient temperature	- 25°C to + 40°C
Standards	IEC - IEEE - CSA - AS - BS

Other characteristics on request

Secondary voltage Usn	10 to 600 V
Voltage factor	1.9 Upn 8h for single pole
Secondary windings	Up to 3 secondary windings
Ambient temperature	- 40°C to + 70°C

OUTDOOR SINGLE PHASE VOLTAGE TRANSFORMER - RME - RUE SERIES

Model	Type	Un	Up	Max rated output VA			Thermal output
		kV	*kV*	*cl0.5*	*cl1*	*cl3*	*VA*
RU12E	1-pole	36/70/170	Up to 35/√3	50	100	300	Up to 500
RM20E	2-poles	24/50/125	Up to 22	50	100	300	Up to 750
RM25E	2-poles	24/50/125	Up to 22	50	100	300	Up to 500
RM30E	2-poles	36/70/170	Up to 35	50	100	300	Up to 2500

Model	Creepage distance		Weight	A	B	C	D	F	G	H	J	Q
	PT mm	*PP mm*	*kg*	*mm*	*mm*	*mm*	*mm*	*mm*	*mm*	*mm*	*mm*	*mm*
RU12E	740	-	30	385	190	470	-	191	180	220	20	60
RM20E	805	890	34	390	270	380	290	190	180	220	20	40
RM25E	930	1590	37	570	220	500	470	190	180	220	20	60
RM30E	1030	1240	69	500	350	485	400	292	180	220	20	65

RM...

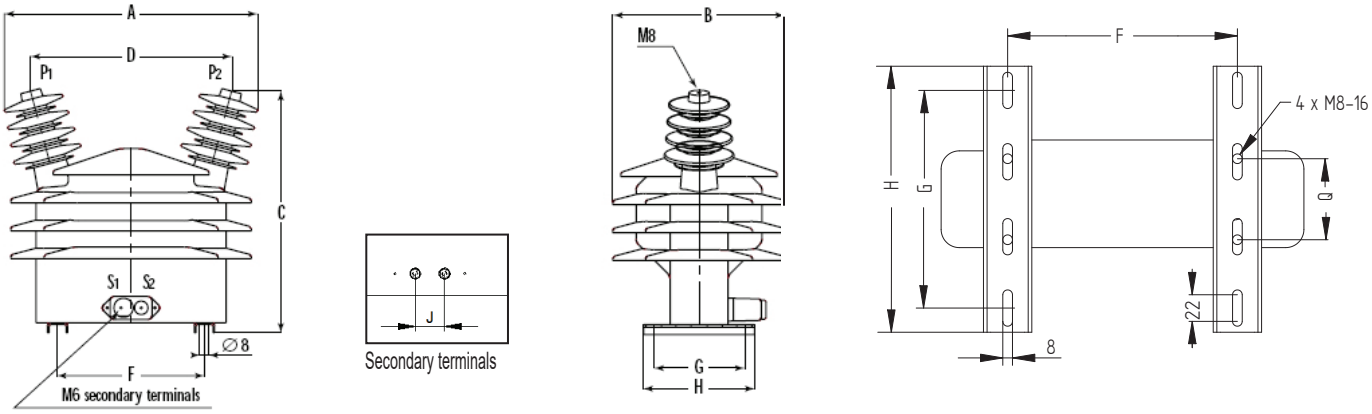

RU12E

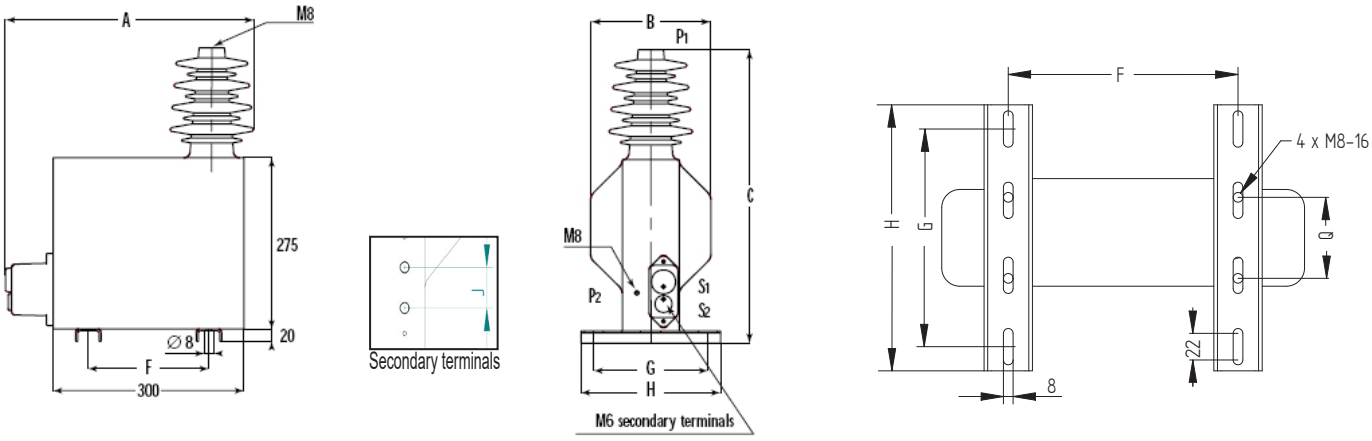

Installation

Tightening torque
terminal M6 : 2 Nm
terminal M8 : 13 Nm