CAPACITIVE VOLTAGE DIVIDERS

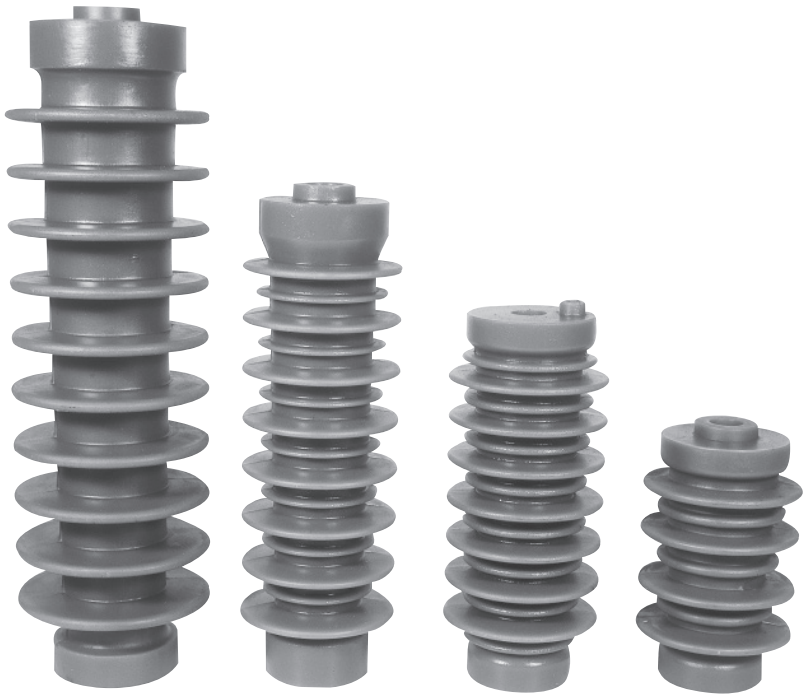

- ***Indoor***
- ***Cast resin***
- ***7.2 to 36 kV***

Voltage dividers are designed for indoor use and conforming to HN 41E01 and IEC 60273

This range of voltage dividers is for detecting the presence of voltage on the busbar.

The neon lamp is not supplied with the voltage divider.

Technical data

Rated insulation level	7.2/20/60 kV to 36/70/170 kV
Insulation class	E
Type	indoor
Fixing insert	M6 to M20
Ambient temperature	- 25°C to + 40°C

Other characteristics on request

Ambient temperature	- 40°C to + 70°C

©RS ISOLSEC

Selection table and dimensions

Type	Us *kV*	A *mm*	B *mm*	C *mm*	D *mm*	M1 *mm*	M2 *mm*	Capacitance *pF*	Bending *daN*	Compression *daN*	Tensile *daN*	Creepage distance *mm*	Weight *kg*
DIVI 12	12	120	74	50	60	M12	M12	100 ou 15	300	4300	2000	258	0.6
DIVI 23	23	175	74	50	60	M12	M12	100 ou 15	200	4300	2000	450	0.85
DIVI 24	24	225	75	50	60	M12	M12	100 ou 15	200	4300	2000	500	1
DIVI 36	36	300	94	60	70	M12	M12	50 ou 15	200	6700	2000	650	1.85

DIVI 12... DIVI 36

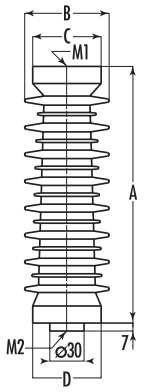

DIVI 23

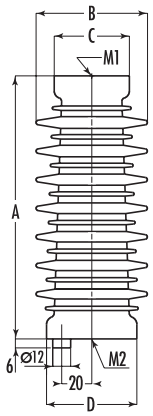

Diagram

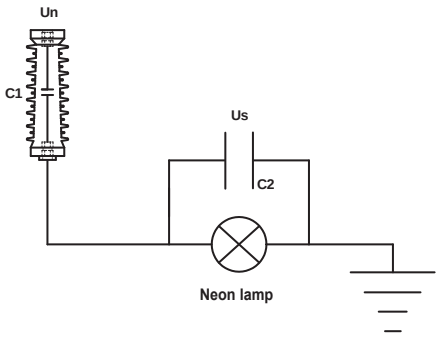

$$Us = \frac{C1}{C1+C2} Un$$

Installation

Tightening torque of M12-16 inserts : 25Nm