# WOUND PRIMARY CURRENT TRANSFORMERS - CB SERIES

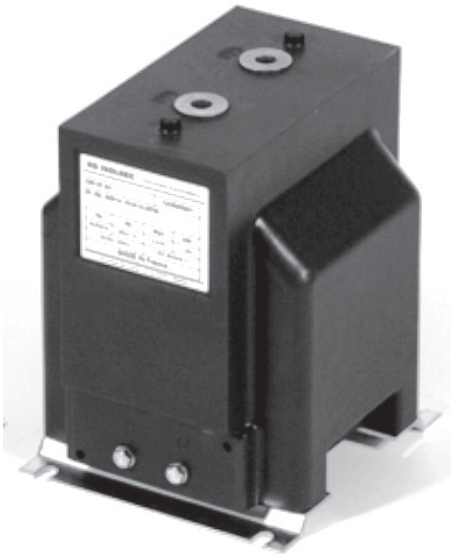

*CB131-A1*



- ***Indoor***
- ***7.2 - 12 - 17.5 - 24 - 36 kV***
- ***Primary current from 0 to 3000 A***
- ***Ith up to 1000 Ipn or 100 kA.1s***
- ***Compact size***
- ***Cast-resin insulated***
- ***Low level of partial discharges***
- ***Up to 5 cores***
- ***Screw-in connectors***

*Current transformers vacuum moulded in self extinguishing epoxy resin for the measurement of AC currents up to 3000A. This comprehensive and compact range of current transformers has been designed to meet the requirements of MV switchgear manufacturers.*

*It offers a very low level of partial discharges.*

*It allows double-ratio up to 600-1200A via primary coupling and up to 5 independent secondary windings.*

## Technical data

| | |
|---|---|
| Rated insulation level | 7.2/20/60 kV to 36/70/170 kV |
| Primary current Ipn | Up to 3000 A |
| Secondary current Isn | 5 or 1 A |
| Frequency | 50 or 60 Hz |
| Rated output | 1 to 100 VA |
| Accuracy class | 1 - 0.2 - 0.2S - 0.5 - 0.5S - 1 - 3 - 5P - 10P - clPX |
| Security factor | 5 to 10 |
| Accuracy limit factor | 5 - 10 - 15 - 20 - 30 |
| Continuous thermal current | 1.2 Ipn |
| Short-time thermal current Ith | Up to 1000 Ipn or 100 kA.1s |
| Dynamic current Idyn | 2.5 Ith |
| Insulation class | E |
| Ambient temperature | - 25°C to + 40°C |
| Mounting | Brackets |
| Standards | IEC - IEEE - CSA - AS - BS |

## Other characteristics on request

| | |
|---|---|
| Power frequency withstand voltage | Up to 75 kV |
| Secondary current Isn | 0.005 to 10 A |
| Double ratio | 5-10 to 600-1200A by primary change-over |
| Multiple cores | Up to 5 cores |
| Ambient temperature | - 40°C to + 70°C |

## Accessories / Options

| | |
|---|---|
| Mounting | No bracket<br>Strenghtened brackets<br>ACEO base plate |
| Sealable terminal cover (IP20) | |

## Selection table and dimensions

| Type | Un *kV* | Weight *kg* | A *mm* | B *mm* | C *mm* | D *mm* | E *mm* |
|---|---|---|---|---|---|---|---|
| **CB110** | 12/28/75 | 10 | 220 | 148 | 150 | 128 | 72 |
| **CB111** | 12/28/75 | 12 | 220 | 148 | 190 | 128 | 104 |
| **CB112** | 12/28/75 | 14 | 220 | 148 | 250 | 128 | 138 |
| **CB113** | 12/28/75 | 16 | 220 | 148 | 300 | 128 | 188 |
| **CB114** | 12/28/75 | 12 | 220 | 148 | 350 | 128 | 238 |
| **CB120** | 12/28/75 | 12 | 220 | 158 | 150 | 128 | 72 |
| **CB131** | 17.5/38/95 | 16 | 220 | 178 | 190 | 128 | 104 |
| **CB132** | 17.5/38/95 | 21 | 220 | 178 | 250 | 128 | 138 |
| **CB133** | 17.5/38/95 | 24 | 220 | 178 | 300 | 128 | 188 |
| **CB134** | 17.5/38/95 | 29 | 220 | 178 | 350 | 128 | 238 |
| **CB220** | 24/50/125 | 14 | 250 | 158 | 150 | 128 | 72 |
| **CB231** | 24/50/125 | 19 | 250 | 178 | 190 | 128 | 104 |
| **CB232** | 24/50/125 | 23 | 250 | 178 | 250 | 128 | 138 |
| **CB233** | 24/50/125 | 28 | 250 | 178 | 300 | 128 | 188 |
| **CB234** | 24/50/125 | 30 | 250 | 178 | 350 | 128 | 238 |
| **CB241** | 24/50/125 | 19 | 250 | 198 | 190 | 128 | 104 |
| **CB242** | 24/50/125 | 24 | 250 | 198 | 250 | 128 | 138 |
| **CB243** | 24/50/125 | 29 | 250 | 198 | 300 | 128 | 188 |
| **CB244** | 24/50/125 | 34 | 250 | 198 | 350 | 128 | 238 |
| **CB252** | 24/50/125 | 26 | 250 | 228 | 250 | 128 | 138 |
| **CB253** | 24/50/125 | 32 | 250 | 228 | 300 | 128 | 188 |
| **CB254** | 24/50/125 | 36 | 250 | 228 | 350 | 128 | 238 |
| **CB430** | 36/70/170 | 19 | 360 | 178 | 150 | 128 | 72 |
| **CB431** | 36/70/170 | 24 | 360 | 178 | 190 | 128 | 104 |
| **CB432** | 36/70/170 | 30 | 360 | 178 | 250 | 128 | 138 |
| **CB433** | 36/70/170 | 35 | 360 | 178 | 300 | 128 | 188 |
| **CB434** | 36/70/170 | 41 | 360 | 178 | 350 | 128 | 238 |
| **CB441** | 36/70/170 | 26 | 360 | 198 | 190 | 128 | 104 |
| **CB442** | 36/70/170 | 32 | 360 | 198 | 250 | 128 | 138 |
| **CB443** | 36/70/170 | 37 | 360 | 198 | 300 | 128 | 188 |
| **CB444** | 36/70/170 | 43 | 360 | 198 | 350 | 128 | 238 |
| **CB451** | 36/70/170 | 28 | 360 | 228 | 190 | 128 | 104 |
| **CB452** | 36/70/170 | 34 | 360 | 228 | 250 | 128 | 138 |
| **CB453** | 36/70/170 | 39 | 360 | 228 | 300 | 128 | 188 |
| **CB454** | 36/70/170 | 45 | 360 | 228 | 350 | 128 | 238 |
| **CB554** | 36/70/170 | 50 | 400 | 228 | 350 | 128 | 238 |

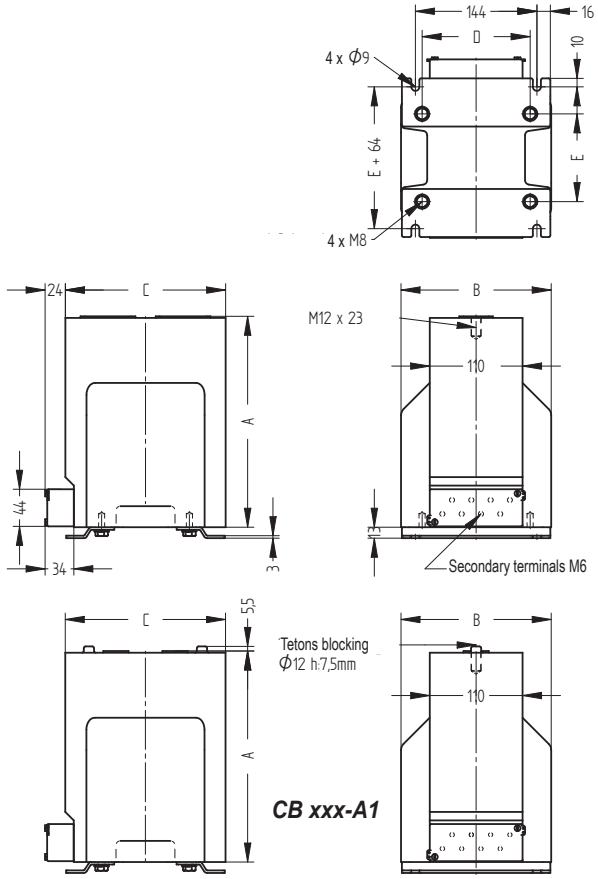


## Installation

Primary terminals: M12 with 23mm useful depth
Tightening torque for primary terminals: 50Nm
Tightening torque for secondary terminals: 2Nm

## Primary terminals table

| | Single ratio primary | | | Double ratio primary | |
|---|---|---|---|---|---|
| **Ip** | **0...600A** | **800...1200A** | **1500...3000A** | **up to 400-800A** | **up to 600-1200A** |
| **C** *mm* | **F** *mm* | **F** *mm* | **F** *mm* | **F** *mm* | **F** *mm* |
| 150 | 70 | - | - | - | - |
| 190 | 70 | 50 | 50 | 74 | - |
| 250 | 120 | 70 | 70 | 74 | 74 |
| 300 | 120 | 120 | 120 | 120 | 120 |
| 350 | 170 | 170 | 170 | 170 | 170 |

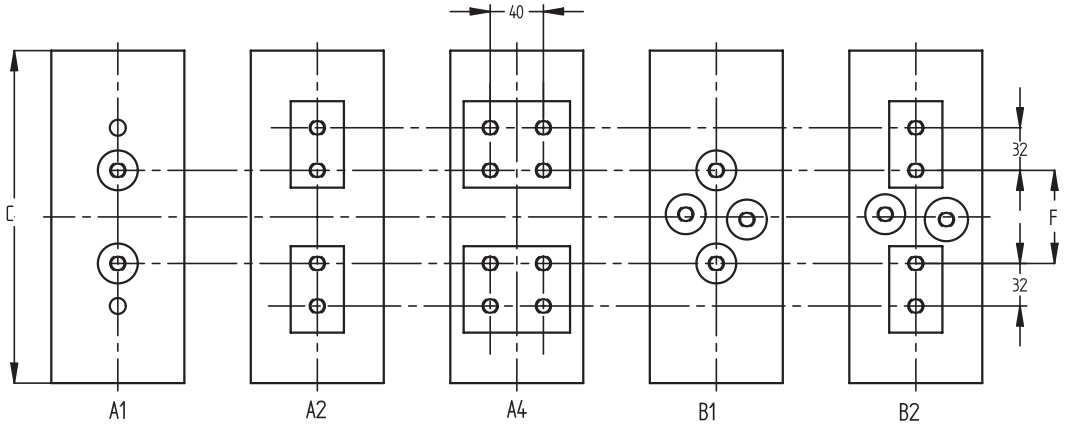

Cette page a été intentionnellement laissée vierge

This page intentionally left blank

Esta página fue dejada en blanco intencionalmente



©RS ISOLSEC