WOUND PRIMARY CURRENT TRANSFORMERS - J..B.. 36kV SERIES

JBT

JBX

JBY

- ***Indoor***
- ***7.2 - 12 - 17.5 - 24 - 36kV***
- ***Primary current from 0 to 2500 A***
- ***Ith up to 1000 Ipn or 100kA.1s***
- ***Compact size***
- ***Dry insulation in epoxy resin***
- ***Up to 4 independent cores***
- ***Maintenance free***

Current transformers vacuum moulded in self extinguishing epoxy resin for the measure of AC currents from 0 up to 2500A.

This comprehensive and compact range of current transformers has been designed to meet the requirements of MV switchgear manufacturers.

It allows for double ratios up to 600-1200 A, and offers up to 4 independent cores.

Technical data

Rated insulation level	7.2/20/60 kV to 36/70/170 kV
Primary current Ipn	Up to 2500 A
Secondary current Isn	5 or 1 A
Frequency	50 or 60 Hz
Rated output	1 to 100 VA
Accuracy class	0.1 - 0.2 - 0.2S - 0.5 - 0.5S - 1 - 3 - 5P 10P - CLX - CLPX
Security factor	From 5 to 10
Accuracy limit factor	5 - 10 - 15 - 20 - 30
Continuous thermal current	1.2 Ipn
Short-time thermal current Ith	Up to 1000 Ipn or 100 kA.1s
Dynamic current Idyn	2.5 Ith
Insulation class	E
Ambient temperature	-5°C to + 40°C
Standards	IEC - IEEE - CSA - AS - BS - UNE

Other characteristics on request

Power-frequency withstand voltage	Up to 75 kV
Double ratio	5-10 to 600-1200A by primary change-over
Secondary current Isn	0.005 to 10 A
Continuous thermal current	1.5 Ipn - 2 Ipn
Multiple cores	Up to 4
Ambient temperature	- 25°C to + 70°C

Accessories / Options

Fixing plate	Standard
Surface finish	Polyurethan or Silicone coating
Sealable cover for secondary terminal (IP31)	Standard
Earth connector	Option

WOUND PRIMARY CURRENT TRANSFORMERS - J..B.. 36KV SERIES

JBT-JBX-JBY

Selection table and dimensions

Type	Un *Up to (kV.)*	Weight *kg*	A *mm*	B *mm*	C *mm*	D *mm*	E *mm*
J7BT	7.2/20/60	21	352	190	200	130	140
J7BX	7.2/20/60	41	360	230	270	150	280
J7BY	7.2/20/60	67	360	230	375	150	330
J12BT	12/28/75	21	352	190	200	130	140
J12BX	12/28/75	41	360	230	270	150	280
J12BY	12/28/75	67	360	230	375	150	330
J17BT	17.5/38/95	21	352	190	200	130	140
J17BX	17.5/38/95	41	360	230	270	150	280
J17BY	17.5/38/95	67	360	230	375	150	330
J24BT	24/50/125	21	352	190	200	130	140
J24BX	24/50/125	41	360	230	270	150	280
J24BY	24/50/125	67	360	230	375	150	330
J36BT	36/70/170	21	352	190	200	130	140
J36BX	36/70/170	41	360	230	270	150	280
J36BY	36/70/170	67	360	230	375	150	330

Primary terminals

Type	Ip	Single ration primary			Double ratio primary			
		0...600A	*600...1250A*	*1250...2500A*	*Up to 300-600A*	*Up to 300-600A*	*Up to 600-1200A*	*Up to 600-1200A*
	C *mm*	**F** *mm*	**F** *mm*	**F** *mm*	**F** *mm*	**F** *mm*	**F** *mm*	**F** *mm*
JBT	200	80	-	-	80	-	-	-
JBX	270	120	120	120	-	120	-	120
JBY	375	120	120	120	-	120	-	120
		A1	**A2**	**A3**	**B1**	**B2**	**B3**	**B4**

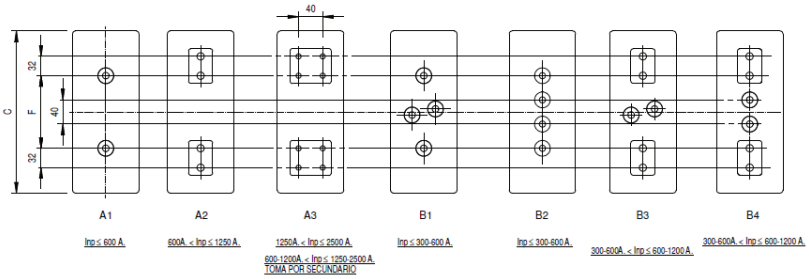

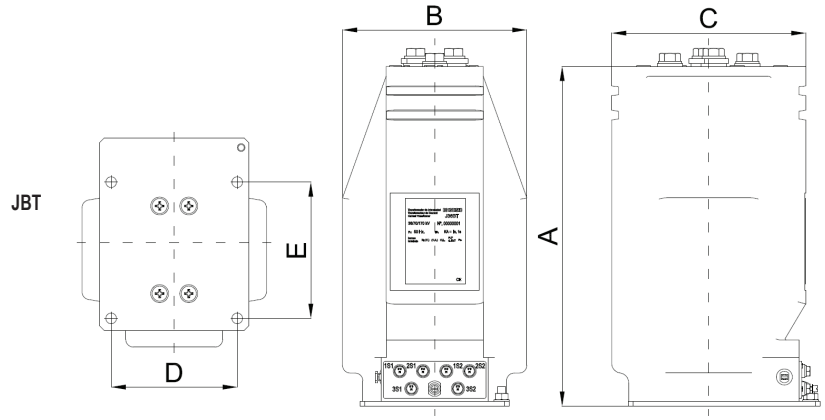

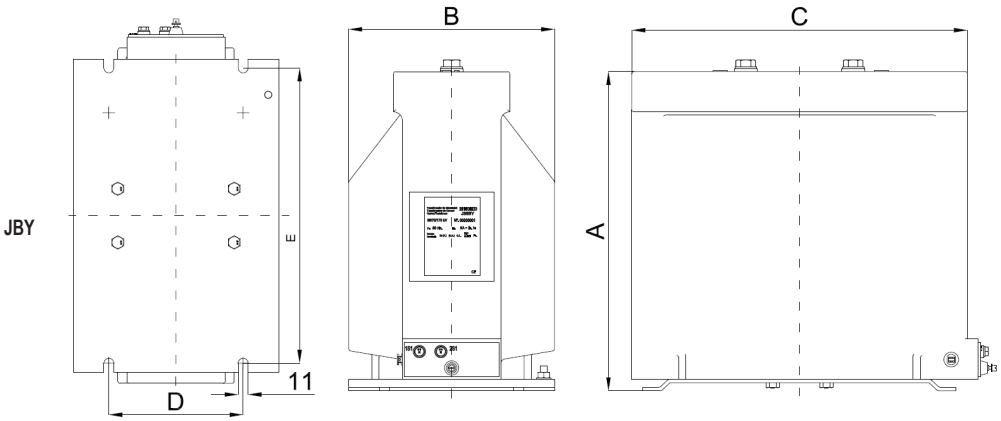

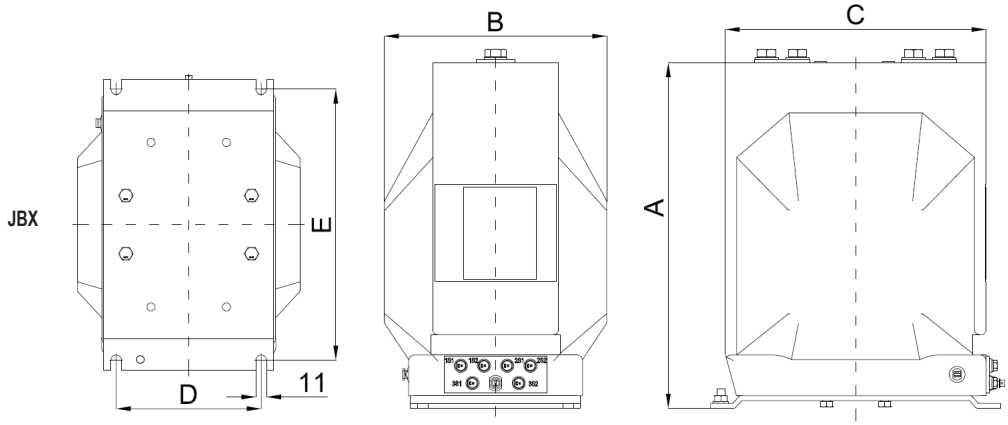

Installation

- This current transformer can be fixed in any position.
- Tightening torque for primary terminals 35 N.m
- Primary terminals M12x23 useful depth.
- Tightening torque for secondary terminals : M6 :4 N.m
- Never leave the secondary circuit of a current transformer open when voltage is applied to the transformer. High voltages may appear at the secondary circuit terminals which can be dangerous to personnel and may result in the destruction of the current transformer.
- This current transformer is maintenance free.