OUTDOOR CURRENT TRANSFORMERS SERIES T24E - T30E

T30E

- ***Outdoor***
- ***7.2 - 12 - 17.5 - 24 - 36 kV***
- ***Primary current up to 600 A***

Outdoor current transformers vacuum moulded in self extinguishing epoxy resin for the measurement of AC currents up to 600A.

They are equipped with a weatherproof terminal box fitted with 2 cable glands.

Technical data

Rated insulation level	7.2/20/60 kV to 36/70/170 kV
Primary current Ipn	0 to 600 A
Secondary current Isn	5 or 1 A
Frequency	50 or 60 Hz
Rated output	1 to 60 VA
Accuracy class	0.1 - 0.2 - 0.2S - 0.5 - 0.5S - 1 - 3 - 5P - 10P - clX
Accuracy limit factor	5 - 10 - 15 - 20 - 30
Continuous thermal current	1.2 Ipn
Short-time thermal current Ith	80 to 200 Ipn
Dynamic current Idyn	2.5 Ith
Insulation class	E
Ambient temperature	- 25° C to + 40 °C
Standards	IEC - IEEE - CSA - AS - BS

Other characteristics on request

Secondary current Isn	0.005 to 10 A
Double ratio	Secondary tapping for T24E model Primary change-over for T30E model
Multiple cores	Up to 2 separate cores
Ambient temperature	- 40° C to + 70 °C

OUTDOOR CURRENT TRANSFORMERS SERIES T24E - T30E - RC15E - RC36E - RC306E

Selection table and dimensions

Type	Un	Creepage distance	Weight	A	B	C	D	E	F	G	H	J	K	L
	kV	*mm*	*kg*	*mm*	*mm*	*mm*	*mm*	*mm*	*mm*	*mm*	*mm*	*mm*	*mm*	*mm*
T24E	24/50/125	835	28	345	270	370	430	245	30	65	180	220	180	8
T30E	36/70/170	1000	53	370	355	480	610	300	30	80	180	220	180	8
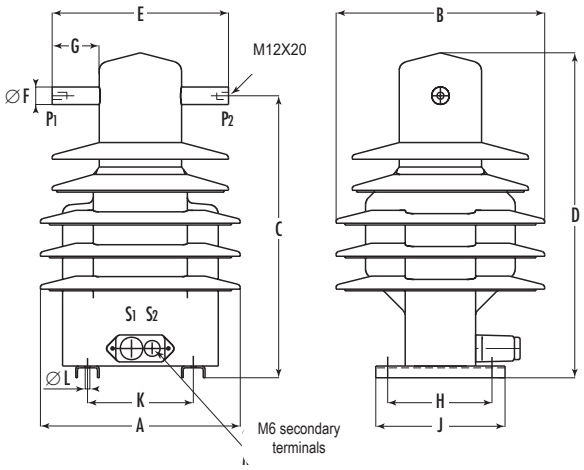
T24E - T30E