SINGLE PHASE OR THREE PHASE VOLTAGE TRANSFORMERS MA - MT SERIES

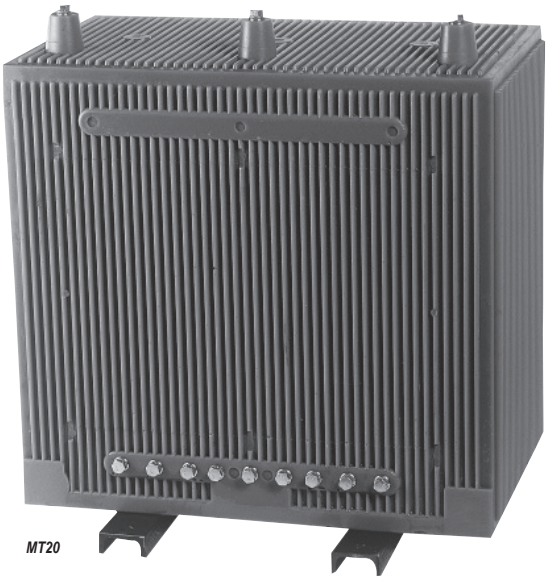

MT20

- ***Indoor***
- ***3.6 - 7.2 - 12 - 17.5 - 24 kV.***
- ***Output up to 17 kVA***
- ***Compact size***

Voltage transformers vacuum moulded in self extinguishing epoxy resin.

This compact range is suitable for the power supply of auxiliaries in generators.

It allows for a wide variety of performances.

Technical data

Rated insulation level	3.6/16/45 kV to 24/50/125 kV
Primary voltage Upn	Up to 22000 V
Secondary voltage Usn	10 to 600 V
Frequency	50 or 60 Hz
Output	Up to 17 kVA
Voltage factor	1.2Upn - 1.9Upn-30s 1.9Upn-8h or 1.9Upn continuous
Insulation class	E
Ambient temperature	- 25°C to + 40°C
Standards	IEC - IEEE - CSA - AS - BS

Other characteristics on request

Secondary windings	Up to 2 separate secondary windings
Internal heat up	Through thermostatic sensor
Ambient temperature	- 40°C to + 70°C

SINGLE PHASE OR THREE PHASE VOLTAGE TRANSFORMERS - MA - MT SERIES

Selection table

Type	Un *kV*	Up P *kV*	Thermal output *kVA*
Single phase			
MA10	12/28/75	up to 11	up to 10
MA20	24/50/125	up to 22	up to 13
MA25	24/50/125	up to 22	up to 16
MA30	24/50/125	up to 22	up to 17
Three phase			
MT3	7.2/20/60	up to 6.6	up to 0.5
MT4	7.2/20/60	up to 6.6	up to 4
MT5	7.2/20/60	up to 6.6	up to 6
MT20	24/50/125	up to 22	up to 15

Type	Weight *kg*	A *mm*	B *mm*	C *mm*	D *mm*	E *mm*	F *mm*	G *mm*	H *mm*	J *mm*	K *mm*	L *mm*	M	N
MA10	175	460	490	420	465	290	240	385	250	125	430	335	-	-
MA20	220	500	490	420	465	300	240	385	400	200	-	-	70	35
MA25	285	570	570	420	545	315	240	385	400	-	493	320	-	-
MA30	330	610	630	420	605	320	450	385	400	-	525	365	-	-
MT3	86	397	300	220	275	177	310	200	220	110	240	188	-	-
MT4	100	480	375	300	350	205	240	265	300	150	310	245	-	-
MT5	135	490	405	300	380	195	240	265	340	170	-	-	45	15
MT20	230	660	480	420	455	300	450	385	540	270	-	-	150	45

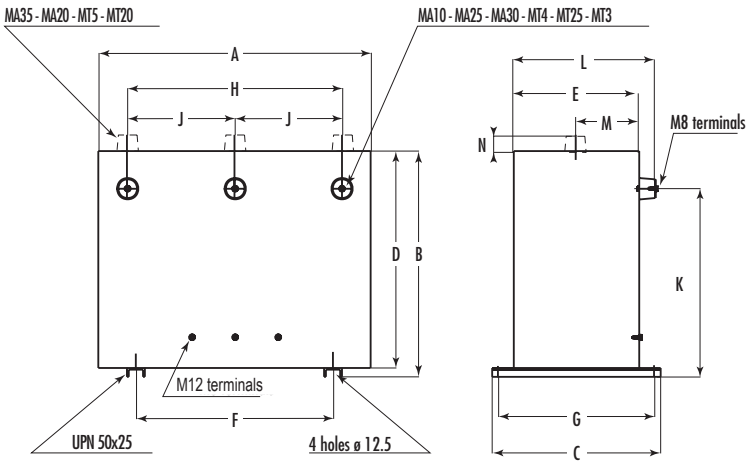

Installation

Max tightening torques :

- M12 terminals : 13 N.m
- M 8 terminals : 10 N.m