FUSE HOLDER FOR TRANSFORMER WITH 1 OR 2 INSULATED POLES

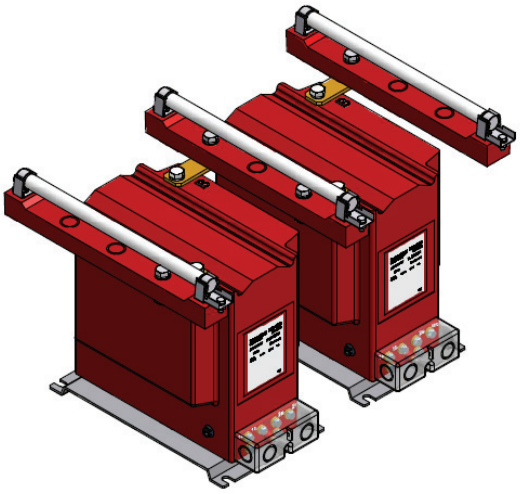

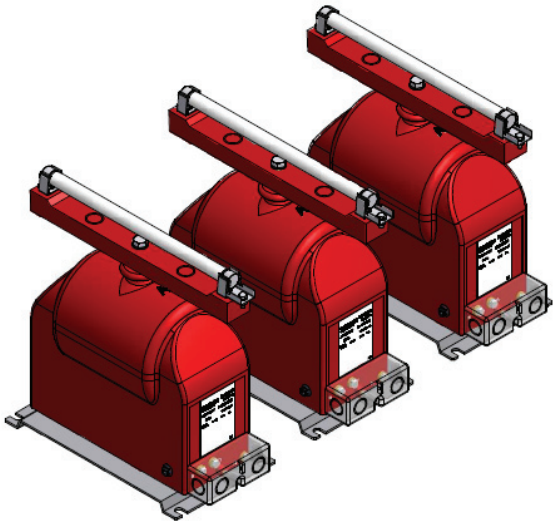

- ***Indoor***
- ***12 - 24 - 36 kV***
- ***1 insulated pole***
- ***2 insulated poles***

Kit for mounting fuse(s) on measuring voltage transformers, 1 or 2 insulated poles. These parts are molded under vacuum, same as voltage transformers.

Made in brown epoxy resin, having excellent mechanical behavior, and good resistance to corrosive atmosphere and fire.

Designed for use of type A and B HPC fuses.
Type A fuses are 0.5A with isolation level up to 25.5kV
Type B fuses are 2.5A with isolation level up to 36kV.

Technical data

Isolation level	12, 24, or 36kV
Frequency	50 or 60 Hz
Insulation class	F
Fuse type A	0.5A from 12 to 25.5kV
Fuse type B	2.5A from 12 to 36kV
Ambient temperature	From - 5°C to + 40°C
Standards	IEC - IEEE - CSA - AS - BS

Accessories

Ambient temperature	- 25°C to + 70°C

FUSE HOLDER FOR TRANSFORMER WITH 1 OR 2 INSULATED POLES

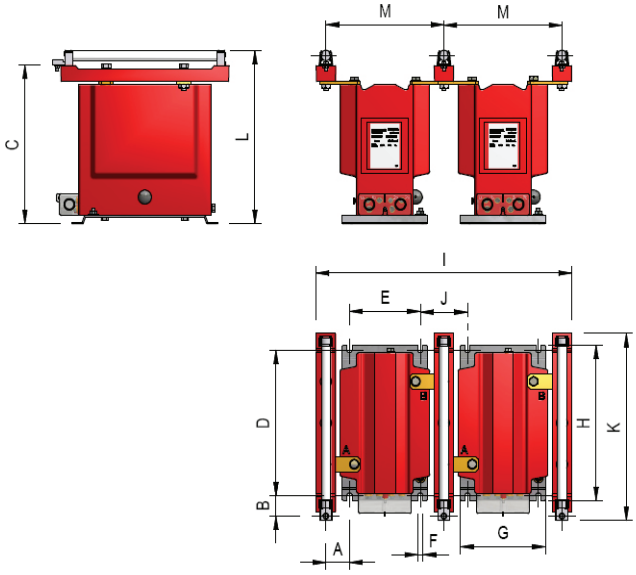

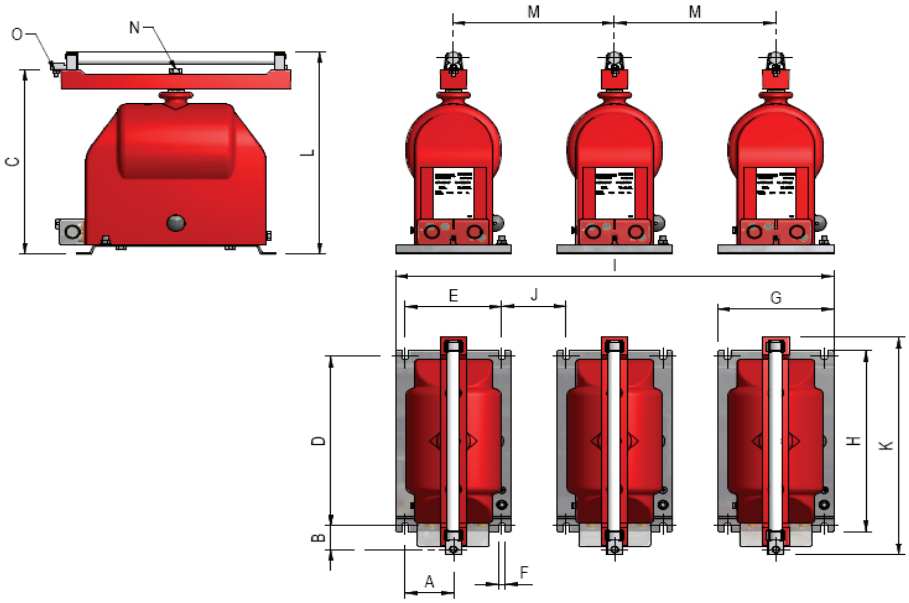

LINE	VT MODEL	INSULATION	A	B			C			D	E	F	G	H	I (*)			J (*)			K			L			M (*)			N	O	Fuse type
				12,5 kV	24 kV	36 kV	12,5 kV	24 kV	36 kV						12,5 kV	24 kV	36 kV	12,5 kV	24 kV	36 kV	12,5 kV	24 kV	36 kV	12,5 kV	24 kV	36 kV	12,5 kV	24 kV	36 kV			
1	EBFA	24KV	75	41		-	316		-	290	150	11	180	310	586	786	-	50	150	-	373		-	346		-	200	300	-	M10	M6	A
2	EBHA		75	127	276	-	309	314	-	290	150	11	180	310	586	786	-	50	150		467	616	-	406	405	-	200	300	-	M10	M6	B
3	EBMA		75	41		-	321		-	290	150	11	178	400	760	840	-	110	150	-	419		-	351		-	260	300	-	M10	M6	A
4			75	127	276	-	313	318	-	290	150	11	178	400	760	840	-	110	150	-	490	639	-	410	409	-	260	300	-	M10	M6	B
5	EBLA		100	15		-	442		-	350	200	11	230	441	752	832	-	60	100	-	447		-	471		-	260	300	-	M12	M6	A
6			100	72	221	-	434	439	-	350	200	11	230	441	752	832	-	60	100	-	506	665	-	434	439	-	260	300	-	M12	M6	B
7	ECOA		60	118		-	378		-	350	200	11	230	441	1170		-	200		-	515		-	407		-	400		-	M12	M6	A
8			60	122	271	-	371	376	-	350	200	11	230	441	1176		-	200		-	550	699	-	468	467	-	400		-	M12	M6	B
9	EFQA		60	61		-	416		-	350	200	14	230	446	1170		-	200		-	446		-	445		-	400		-	M12	M6	A
10			60	147	296	-	408	413	-	350	200	14	230	446	1177		-	200		-	552	801	-	505	504	-	400		-	M12	M6	B
11	EBTA		100	11		-	444		-	350	200	13	228	410	752	832	-	60	100	-	410		-	473		-	260	300	-	M12	M6	A
12			100	97	246	-	432	441	-	350	200	13	228	410	752	832	-	60	100	-	502	651	-	533	532	-	260	300	-	M12	M6	B
13	ECOA	36KV	33			310			378	350	200	11	230	441	-	-	1170	-	-	200			737			469	-	-	400	M12	M6	B
14	EFQA		33			335			415	350	200	14	230	446	-	-	1173	-	-	200			740			506	-	-	400	M12	M6	B
15	EBTA		73			185			443	350	200	13	228	410	-	-	1032	-	-	200			664			534	-	-	400	M12	M6	B
16	UBHA	24KV	50	41		-	316		-	290	150	11	180	310	541		-	100		-	373		-	345		-	250		-	M10	M6	A
17			39	33	180	-	310		-	290	150	11	180	310	518		-	78		-	446	592	-	403		-	229		-	M10	M6	B
18	UBMA		50	41		-	323		-	290	150	11	178	400	541		-	100		-	419		-	352		-	250		-	M10	M6	A
19			39	32	180	-	310	317	-	290	150	11	178	400	658		-	218		-	456	581	-	409		-	658		-	M10	M6	B
20	UCOA		110	15		-	381		-	350	200	11	230	441	881		-	220		-	441		-	410		-	420		-	M12	M6	A
21			109	20	168	-	376		-	350	200	11	230	441	899		-	218		-	441	596	-	465		-	418		-	M12	M6	B
22	UFQA		110	11		-	419		-	350	200	14	230	446	881		-	220		-	446		-	448		-	420		-	M12	M6	A
23			109	45	193	-	414	411	-	350	200	14	230	446	897		-	218		-	446	599		505	502	-	898		-	M12	M6	B
24	UCOA	36KV	87	-	-	210	-	-	378	350	200	11	230	441	-	-	856	-	-	174	-	-	662	-	-	464	-	-	374	M12	M6	B
25	UFQA		87	-	-	235	-	-	416	350	200	14	230	446	-	-	856	-	-	174	-	-	662	-	-	464	-	-	374	M12	M6	B

dimensions in mm Overall tolerance +/- 5mm (*) Recommanded