# OUTDOOR CURRENT TRANSFORMER - J..C.. SERIES

JCD

JCV

JCY



- ***Outdoor***
- ***7.2 - 12 - 17.5 - 24 - 36 - 52kV***
- ***Primary current from 0 to 2500 A***
- ***Ith up to 1000 Ipn or 100kA.1s***
- ***Dry insulation in epoxy resin***
- ***Up to 4 independent cores***
- ***Maintenance free***

*Current transformers vacuum moulded in self extinguishing epoxy resin for the measure of AC currents from 0 up to 2500A.*

*This comprehensive and compact range of current transformers has been designed to meet the requirements of MV switchgear manufacturers.*

*It allows for double ratios up to 600-1200 A, and offers up to 4 independent cores.*

## Technical data

| | |
|---|---|
| Rated insulation level | 7.2/20/60 kV to 52/95/250 kV |
| Primary current Ipn | Up to 2500 A |
| Secondary current Isn | 5 or 1 A |
| Frequency | 50 or 60 Hz |
| Rated output | 1 to 100 VA |
| Accuracy class | 0.1 - 0.2 - 0.2S - 0.5 - 0.5S - 1 - 3 - 5P 10P - CLX - CLPX |
| Security factor | From 5 to 10 |
| Accuracy limit factor | 5 - 10 - 15 - 20 - 30 |
| Continuous thermal current | 1.2 Ipn |
| Short-time thermal current Ith | Up to 1000 Ipn or 100 kA.1s |
| Dynamic current Idyn | 2.5 Ith |
| Surface finish | Polyurethan coating |
| Insulation class | E |
| Ambient temperature | - 5°C to + 40°C |
| Standards | IEC - IEEE - CSA - AS - BS - UNE |

## Other characteristics on request

| | |
|---|---|
| Power-frequency withstand voltage | Up to 75 kV |
| Double ratio | 5-10 to 600-1200A by primary change-over |
| Secondary current Isn | 0.005 to 10 A |
| Accuracy class | CL TPS |
| Continuous thermal current | 1.5 Ipn - 2 Ipn |
| Multiple cores | Up to 4 |
| Ambient temperature | - 25°C to + 70°C |

## Accessories / Options

| | |
|---|---|
| Fixing plate | Standard |
| Surface finish | Silicone coating |
| Sealable cover for secondary terminal (IP65) | Standard |
| Earth connector | Option |

# OUTDOOR CURRENT TRANSFORMER - J..C.. SERIES

## Selection table and dimensions

| Type | Un<br>*Up to (kV.)* | Weight<br>*kg* | A<br>*mm* | ØB<br>*mm* | C<br>*mm* | D<br>*mm* | E<br>*mm* | Creep.<br>*mm* |
|---|---|---|---|---|---|---|---|---|
| **J7CD** | 7.2/20/60 | 24 | 342 | 247 | 247 | 220 | 220 | 563 |
| **J7CR** | 7.2/20/60 | 43 | 340 | 330 | 330 | 290 | 290 | 778 |
| **J7CT** | 7.2/20/60 | 30 | 468 | 247 | 247 | 220 | 220 | 915 |
| **J7CS** | 7.2/20/60 | 35 | 608 | 270 | 270 | 220 | 220 | 1174 |
| **J7CY** | 7.2/20/60 | 80 | 477 | 330 | 436 | 290 | 290 | 1155 |
| **J7CYA** | 7.2/20/60 | 85 | 516 | 330 | 436 | 290 | 290 | 1341 |
| **J7CV** | 7.2/20/60 | 155 | 724 | 374 | 513 | 286 | 286 | 1612 |
| **J12CD** | 12/28/75 | 24 | 342 | 247 | 247 | 220 | 220 | 563 |
| **J12CR** | 12/28/75 | 43 | 340 | 330 | 330 | 290 | 290 | 778 |
| **J12CT** | 12/28/75 | 30 | 468 | 247 | 247 | 220 | 220 | 915 |
| **J12CS** | 12/28/75 | 35 | 608 | 270 | 270 | 220 | 220 | 1174 |
| **J12CY** | 12/28/75 | 80 | 477 | 330 | 436 | 290 | 290 | 1155 |
| **J12CYA** | 12/28/75 | 85 | 516 | 330 | 436 | 290 | 290 | 1341 |
| **J12CV** | 12/28/75 | 155 | 724 | 374 | 513 | 286 | 286 | 1612 |
| **J17CD** | 17.5/38/95 | 24 | 340 | 330 | 330 | 290 | 290 | 563 |
| **J17CR** | 17.5/38/95 | 43 | 340 | 330 | 330 | 290 | 290 | 778 |
| **J17CT** | 17.5/38/95 | 30 | 468 | 247 | 247 | 220 | 220 | 915 |
| **J17CS** | 17.5/38/95 | 35 | 608 | 270 | 270 | 220 | 220 | 1174 |
| **J17CY** | 17.5/38/95 | 80 | 477 | 330 | 436 | 290 | 290 | 1155 |
| **J17CYA** | 17.5/38/95 | 85 | 516 | 330 | 436 | 290 | 290 | 1341 |
| **J17CV** | 17.5/38/95 | 155 | 742 | 374 | 513 | 286 | 286 | 1612 |
| **J24CD** | 24/50/125 | 24 | 342 | 247 | 247 | 220 | 220 | 563 |
| **J24CR** | 24/50/125 | 43 | 340 | 330 | 330 | 290 | 290 | 778 |
| **J24CT** | 24/50/125 | 30 | 468 | 247 | 247 | 220 | 220 | 915 |
| **J24CS** | 24/50/125 | 35 | 608 | 270 | 270 | 220 | 220 | 1174 |
| **J24CY** | 24/50/125 | 80 | 477 | 330 | 436 | 290 | 290 | 1155 |
| **J24CYA** | 24/50/125 | 85 | 516 | 330 | 436 | 290 | 290 | 1341 |
| **J24CV** | 24/50/125 | 155 | 724 | 374 | 513 | 286 | 286 | 1612 |
| **J36CT** | 36/70/170 | 30 | 468 | 247 | 247 | 220 | 220 | 915 |
| **J36CS** | 36/70/170 | 35 | 608 | 270 | 270 | 220 | 220 | 1174 |
| **J36CY** | 36/70/170 | 80 | 477 | 330 | 436 | 290 | 290 | 1155 |
| **J36CYA** | 36/70/170 | 85 | 516 | 330 | 436 | 290 | 290 | 1341 |
| **J36CV** | 36/70/170 | 155 | 724 | 374 | 513 | 286 | 286 | 1612 |
| **J52CV** | 52/95/250 | 155 | 724 | 374 | 513 | 286 | 286 | 1612 |

*JCD*

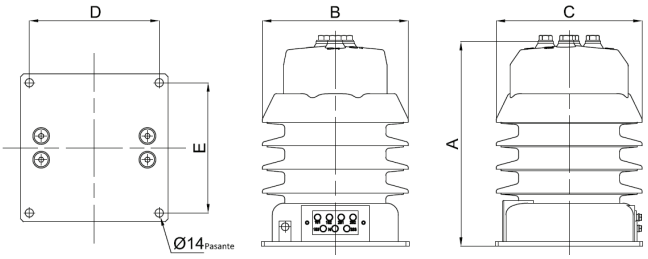


*JCR*

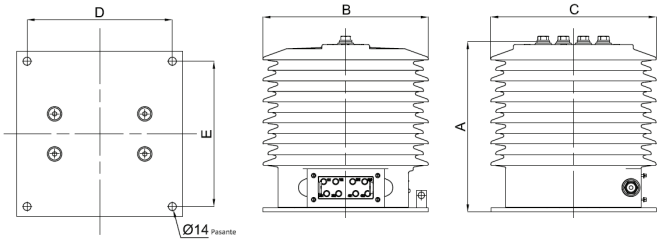


*JCT*

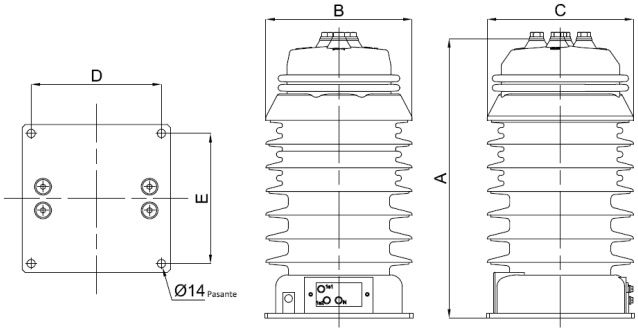


*JCS*

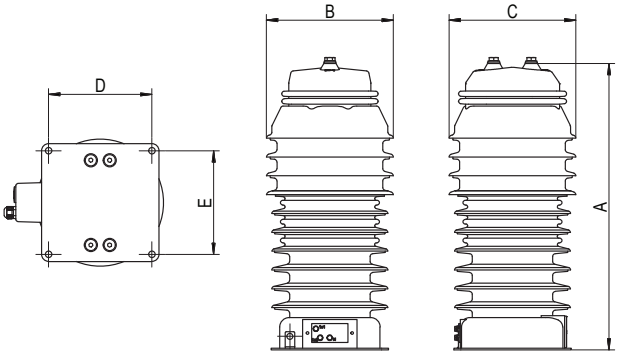


*JCY / JCYA*

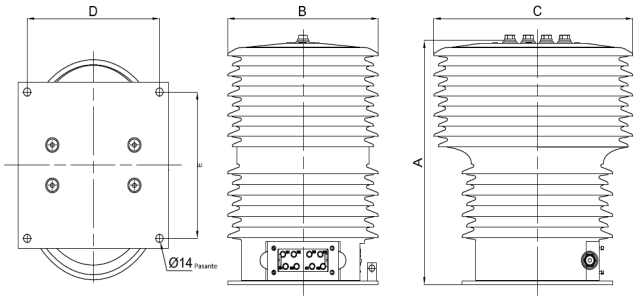


*JCV*

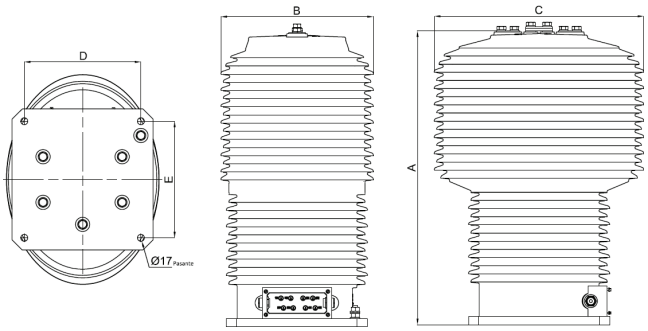

**Primary terminals**

| Type | Single ratio primary | | | | Double ratio primary | | | | |
|---|---|---|---|---|---|---|---|---|---|
| | *0...600A* | *600...1250A* | | *1250...2500A* | *Up to 300-600A* | *Up to 300-600A* | *Up to 600-1200A* | *Up to 600-1200A* | *Up to 600-1200A* |
| | **F** | **F** | **F** | **F** | **F** | **F** | **F** | **F** | **F** |
| | *mm* | *mm* | *mm* | *mm* | *mm* | *mm* | *mm* | *mm* | *mm* |
| **JCD** | 80 | - | - | - | 80 | - | - | - | - |
| **JCR** | 120 | 120 | 120 | 120 | - | 120 | - | 120 | - |
| **JCT** | 80 | - | - | - | 80 | - | - | - | - |
| **JCS** | 80 | - | - | - | 80 | - | - | - | - |
| **JCY** | 120 | 120 | 120 | 120 | - | 120 | - | 120 | 120 |
| **JCYA** | 120 | 120 | 120 | 120 | - | 120 | - | 120 | 120 |
| **JCV** | - | 120 | - | - | - | - | - | 120 | - |
| | **A1** | **A2** | **A2A** | **A3** | **B1** | **B2** | **B3** | **B4** | **B5** |

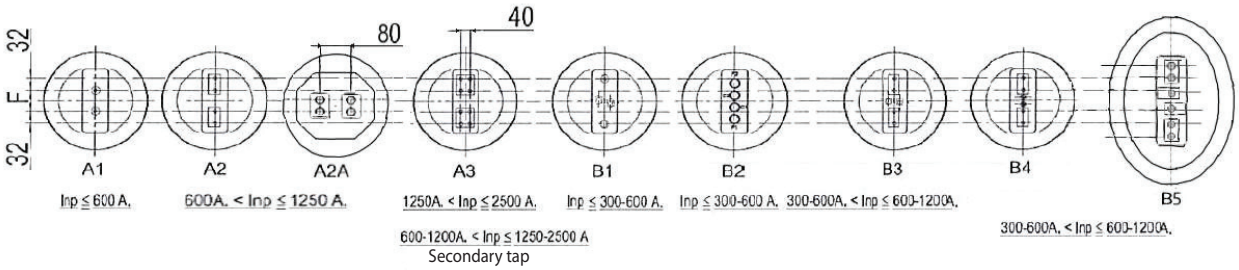


**Installation**

- This current transformer can be fixed in any position.
- Tightening torque for primary terminals 35 N.m
- Primary terminals M12x23 useful depth.
- Tightening torque for secondary terminals : M6 :4 N.m
- Never leave the secondary circuit of a current transformer open when voltage is applied to the transformer. High voltages may appear at the secondary circuit terminals, which can be dangerous to personnel and may result in the destruction of the current transformer.
- This current transformer is maintenance free.

Cette page a été intentionnellement laissée vierge

This page intentionally left blank

Esta página fue dejada en blanco intencionalmente