SINGLE PHASE AUXILIARY POWER TRANSFORMERS
1 OR 2 INSULATED POLE - E..G.. AND U..G.. A/B/C/W SERIES

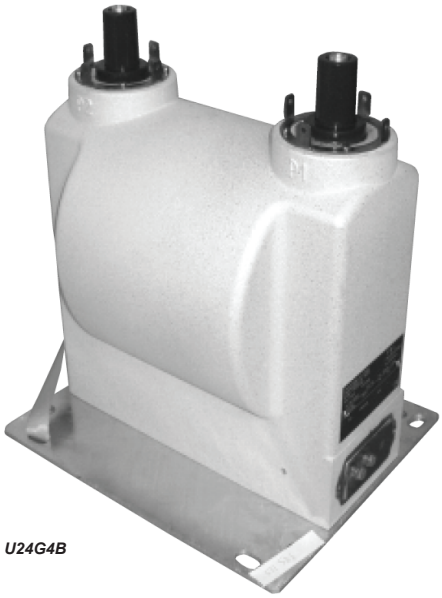

U24G4B

E36G2C

- ***Auxiliary power***
- ***Indoor, Outdoor or Submersible***
- ***7.2 - 12 - 17.5 - 24 - 36 kV***
- ***Touch proof finish***

1 or 2 pole voltage transformers vacuum moulded in self extinguishing epoxy resin powered by voltages between phase and earth up to 36 000/√3 V.

The user connects an insulated cable equiped with a standard female or male plug. Plug -in and plug-out have to be done with no voltage present.

The transformer's surface is coated with a metallic compound that ensures a safe repartition of the magnetic field and zero-potential surface.

The anti-explosion system exclusively deals with secondary fault (short-circuit, maintained overload...).
Under no circumstances it can handle a primary fault (overvoltage, ferroresonance, lightning, switching...)
This system must be associated with a cut-off relay. Maintaining feeding of VT would result in its destruction.

Technical data

Rated insulation level	From 3.6/16/45 kV to 36/70/170 kV
Primary voltage Upn	Up to 36 000V
Secondary voltage Usn	110 - 220 - 380 V
Frequency	50 or 60 Hz
Voltage factor	1,2 Un
Thermal limiting output	Up to 10 kVA
Surface finish	Metallic surface (Touch proof)
Insulation class	E
Ambient temperature	- 5°C to + 40°C / 25°F to 100°F
Earth terminal	On base plate
Standards	IEC - IEEE - CSA - AS - BS - UNE

Other characteristics on request

Secondary voltage Usn	24/√3 to 380/√3 V
Setting taps +/- %	+/-2.5 or 5 %
Secondary tapping	
Ambient temperature	- 25°C to + 70°C / -13°F to +160°F
Earth connector	On base plate
Antiferroresonance	Low induction - Air gap

Accessoires / Options

Fixing plate	Standard
Surface finish	Submersible
Secondary terminal	Indoor : cover (IP31) Outdoor : waterproof cover (IP54) or Submersible connector (IP67or IP68)
Anti-explosion device	Option

SINGLE PHASE AUXILIARY POWER TRANSFORMERS 1 OR 2 INSULATED POLE - E..G.. AND U..G.. A/B/C/W SERIES

Denomination example :

E	3 6	G 2	C

- C — Primary terminal type
- G 2 — Mould type denomination
- 3 6 — Highest voltage for the equipment (Um)
- E — Type of primary connection
  - E phase to earth connection
  - U phase to phase connection

ONE INSULATED POLE - PHASE TO EARTH											
E..G1..		E..G2..		E..G4..		E..G5..		E..G7..		E..G8..	
Drawing type											
Mod.01		Mod.01		Mod.02		Mod.01/02		Mod.01/02		Mod.02	
General Dimensions. [mm].											(± 5mm.)
A:	280	A:	340	A:	332	A:	382	A:	500	A:	560
B:	255	B:	307	B:	317	B:	350	B:	458	B:	561
C:	148	C:	186	C:	225	C:	270	C:	335	C:	410
D:	120	D:	120	D:	120	D:	146	D:	200	D:	270
M : 25 kg		M :45 kg		M : 55 kg		M : 75 kg		M : 135 kg		M : 320 kg	

TWO INSULATED POLES - PHASE TO PHASE							
U..G4..		U..G5..		U..G7..		U..G8..	
General Dimensions. [mm].					(± 5mm.)		
A:	332	A:	382	A:	500	A:	560
B:	317	B:	350	B:	458	B:	561
C:	225	C:	270	C:	335	C:	410
D:	120	D:	146	D:	200	D:	270
M : 57 kg		M : 77 kg		M : 137 kg		M : 327 kg	

Mod. 01

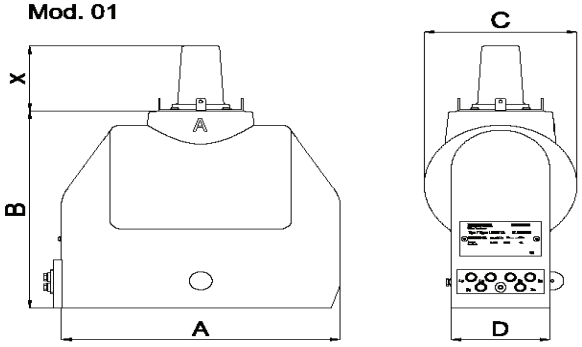

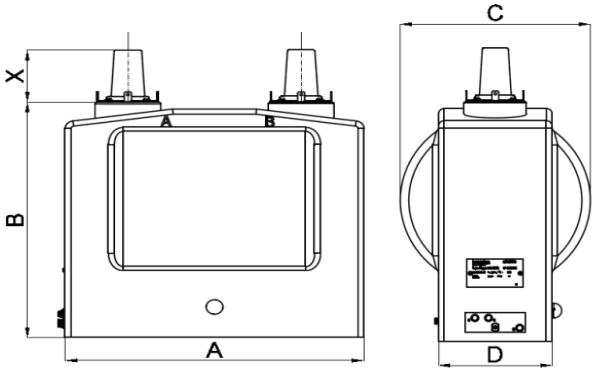

Mod. 02

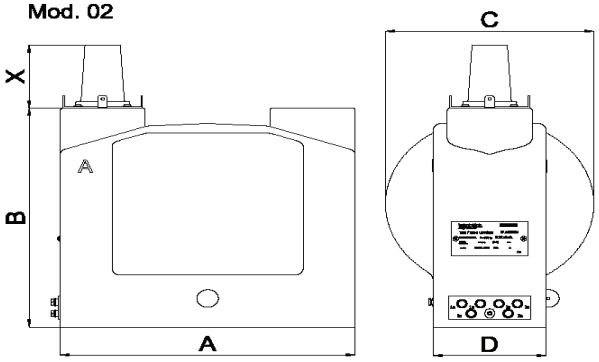

UNE-EN IEC 50181 H.V. PRIMARY TERMINAL TYPE					
TYPE A - up to 24 kV.	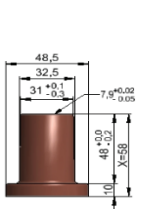	TYPE B - up to 36 kV.	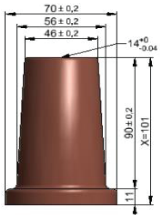	TYPE C - up to 36 kV.	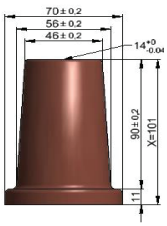

IEEE Std. 386™ H.V. PRIMARY TERMINAL TYPE	
TYPE W - up to 21.1kV.	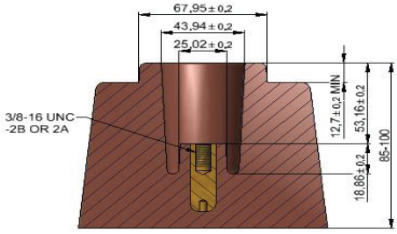

ONE INSULATED POLE Pth. - INDICATIVE BURDEN [VA]							TWO INSULATED POLES Pth. - INDICATIVE BURDEN [VA]			
E..G1..	E..G2..	E..G4..	E..G5..	E..G7..	E..G8..		U..G4..	U..G5..	U..G7..	U..G8..
250	750	1500	1800	8000	10000	Up to ≤24 kV.	1000	2100	10000	10000
-	400	900	1100	7500	10000	Up to ≤36 kV.	900	1100	7500	10000

SINGLE PHASE AUXILIARY POWER TRANSFORMERS 1 OR 2 INSULATED POLE - E..G.. AND U..G.. A/B/C/W SERIES

SECONDARY OUTPUT TERMINALS	
Use: Indoor.	
Taps: M6 Screws	Cable: 2 / 3 ...copper wire cable (according to maximum burden)
Use: Outdoor.	
Taps: M6 Inox Screws	Cable: 2 / 3 ...copper wire cable (according to maximum burden)
Use: Submersible	
Terminal IP67 / IP68 - 3 / 4 pins (according to maximun burden)	Cable: 2 / 3 ...copper wire cable (according to maximum burden)

SECONDARY SEALABLE BOX *(dimensions in mm.) (± 5mm.)*

Use: Indoor.	Submersible
Transparent - IP31 - holes: 4 x PG16	
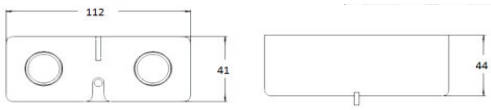	
Use: Outdoor.	
Plastic type: White - IP54 - Holes: 1xPG11 + 1xPG21	Metallic type: Inox - IP55 - Holes: 2xPG21 (consult for other options)
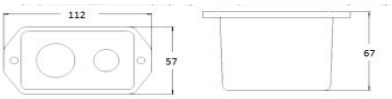	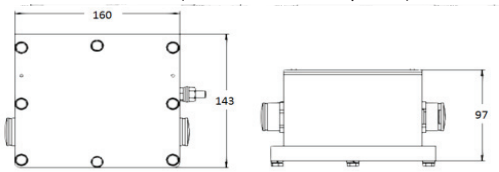

BASE PLATES - FIXING BRACKETS *(dimensions in mm.) (± 5mm.)*

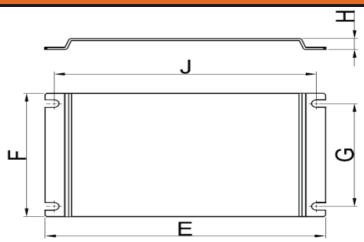

- Standard fixing plate see beelow
- Base plates and fixing brackets of different dimensions. (Please consult us)

(earthing terminal included - please consult us)

E..G1..				E..G2..				E..G4..				E..G5..				E..G7..				E..G8..			
-				-				U..G4..				U..G5..				U..G7..				U..G8..			
Use: Indoor.																							
E	F	G	J	E	F	G	J	E	F	G	J	E	F	G	J	E	F	G	J	E	F	G	J
310	180	150	290	433	186	165	300	310	180	150	290	370	230	200	350	600	340	300	500	700	420	370	670
H.: 16				H.: 5				H.: 16				H.: 17				H.: 20				H.: 20			
Fixation: 4 x Ø 11				Fixation: 4 x Ø 11				Fixation: 4 x Ø 11				Fixation: 4 x Ø 11				Fixation: 4 x Ø 12,5				Fixation: 4 x Ø 12,5			
Earth terminal: M8				Earth terminal: M8				Earth terminal: M8				Earth terminal:M8				Earth terminal:M12				Earth terminal:M12			
Use: Outdoor.																							
E	F	G	J	E	F	G	J	E	F	G	J	E	F	G	J	E	F	G	J	E	F	G	J
310	180	150	290	433	186	165	300	310	180	150	290	340	290	240	270	600	340	300	500	700	420	370	670
H.: 16				H.: 5				H.: 16				H.: 17				H.: 20				H.: 20			
Fixation: 4 x Ø 11				Fixation: 4 x Ø 11				Fixation: 4 x Ø 11				Fixation: 4 x Ø 11				Fixation: 4 x Ø 12,5				Fixation: 4 x Ø 12,5			
Earth terminal: M8				Earth terminal: M8				Earth terminal: M8				Earth terminal: M8				Earth terminal:M12				Earth terminal:M12			
Use: Submersible																							
E	F	G	J	E	F	G	J	E	F	G	J	E	F	G	J	E	F	G	J	E	F	G	J
310	180	150	290	433	186	165	300	310	180	150	290	370	230	200	350	600	340	300	500	700	420	370	670
H.: 16				H.: 5				H.: 16				H.: 17				H.: 20				H.: 20			
Fixation: 4 x Ø 11				Fixation: 4 x Ø 11				Fixation: 4 x Ø 11				Fixation: 4 x Ø 11				Fixation: 4 x Ø 12,5				Fixation: 4 x Ø 12,5			
Earth terminal: M8				Earth terminal: M8				Earth terminal: M8				Earth terminal: M8				Earth terminal:M12				Earth terminal:M12			

Please, consult manufacturing options according to requested specifications.

Cette page a été intentionnellement laissée vierge

This page intentionally left blank

Esta página fue dejada en blanco intencionalmente