SINGLE PHASE 2-POLE VOLTAGE TRANSFORMER RM SERIES

RM5

RM7

- ***Indoor***
- ***3.6 - 7.2 - 12 - 17.5 - 24 - 36 kV***

Double pole voltage transformers vacuum moulded in self extinguishing epoxy resin for the measurement of AC voltages between phases up to 36 kV, with rated outputs up to 100 VA CL0.2 or 150 VA CL0.5.

This range is also suitable for the power supply of auxiliairies up to 2500VA CLA.

Technical data

Rated insulation level	3.6/16/45 kV to 36/70/170 kV
Primary voltage Upn	Up to 36000 V
Secondary voltage Usn	100 - 110 V
Frequency	50 or 60 Hz
Rated output	Up to 100 VA CL 0.2 - 150 VA CL 0.5 - 200 VA CL 1
Accuracy class	0.1 - 0.2 - 0.5 - 1 - 3 - 3P - 6P
Voltage factor	1.2 Upn permanent
Thermal limiting output	Up to 2500 VA
Insulation class	E
Ambient temperature	- 25°C to + 40°C
Standards	IEC - IEEE - CSA - AS - BS

Other characteristics on request

Secondary voltage Usn	10 to 600 V
Secondary windings	Up to 3 secondary windings
Ambient temperature	- 40°C to + 70°C

SINGLE PHASE 2-POLE VOLTAGE TRANSFORMER - RM SERIES

Model	Un	Up	Max rated output VA			Thermal output
	kV	kV	cl0,5	cl1	cl3	VA
RM5	7.2/20/60	Up to 6.6	30	50	100	Up to 300
RM7	7.2/20/60	Up to 6.6	60	100	150	Up to 300
RM10	12/28/75	Up to 7.2	50	75	150	Up to 400
RM15	17.5/38/95	Up to 11	75	150	300	Up to 750
RM30	36/70/170	Up to 35	150	200	500	Up to 2500

Model	Weight	A	B	C	D	E	F	G	H	J	K	L	M	Q
	kg	mm	mm	mm	mm	mm	mm	mm	mm	mm	mm	mm	mm	mm
RM5	11	220	198	133	251	190	160	180	188	40	40	6	-	50
RM7	16	220	205	120	270	-	185	180	-	33	35	8	225	75
RM10	16	220	231	159	275	248	185	180	214	50	40	8	-	67
RM15	21	220	250	168	300	-	190	180	-	50	35	8	250	67
RM30	52	220	360	250	378	-	310	180	-	50	40	8	320	66

RM5 - RM10

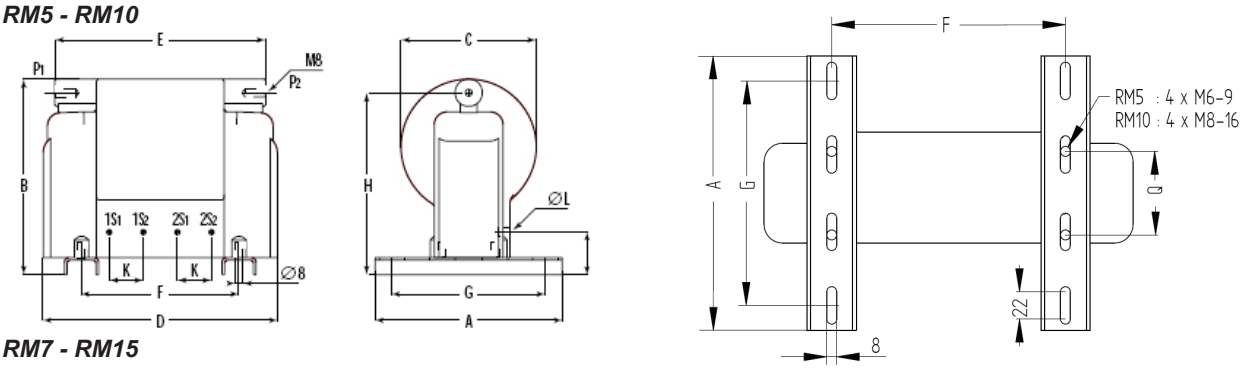

RM7 - RM15

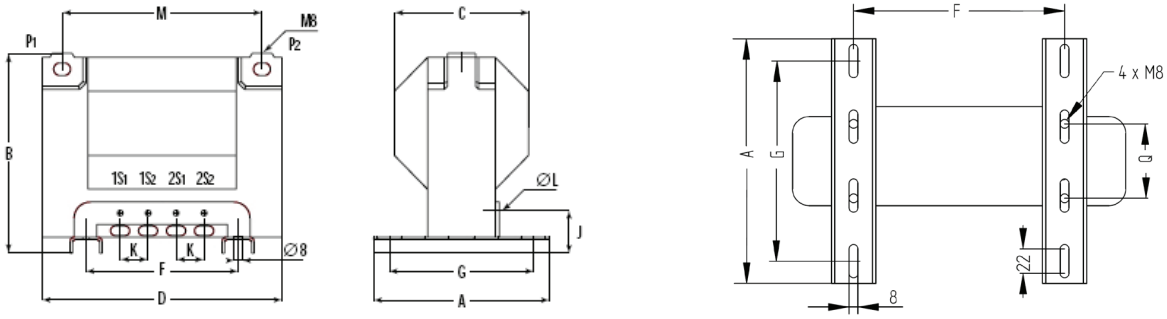

RM30

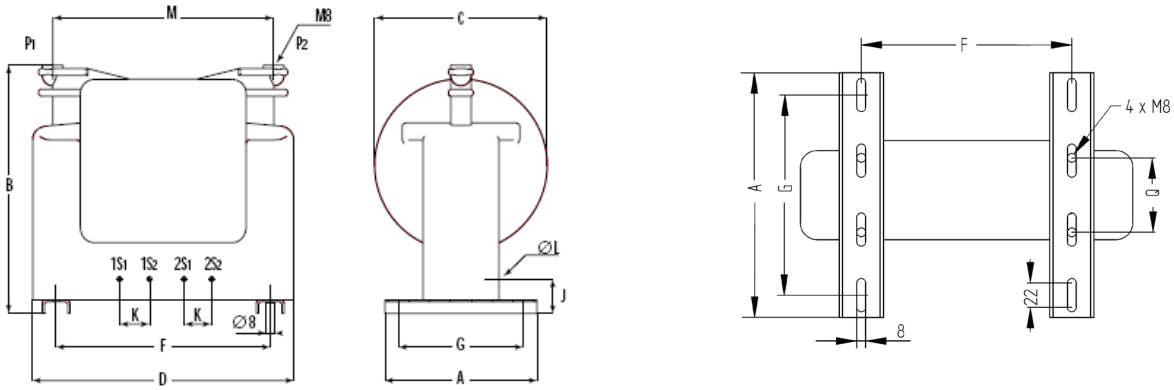

Installation: Tightening torque

terminal M6 : 6 Nm

terminal M8 : 13N.m