SINGLE PHASE 1-POLE PLUG-IN VOLTAGE TRANSFORMERS OUTDOOR - E..G.. A/B/C/W SERIES

Denomination example :

E	2 4	G 2	B

- B — Primary terminal type
- G 2 — Mould type denomination
- 2 4 — Highest Voltage for the equipement (Um)
- E — Type of primary connection
  - U phase to phase connection
  - E phase to earth connection

E24G2B

- ***Outdoor***
- ***7.2 - 12 - 17.5 - 24 - 36 kV***
- ***Primary voltage up to 36/√3 kV***
- ***Touchproof finish***
- ***For metering, protection or auxiliary power***

1-pole voltage transformers vacuum moulded in self extinguishing epoxy resin for the measure of AC voltages between phase and earth up to 36 000/√3 V.

The user connects an insulated cable equiped with a standard female or male plug. Plug -in and plug-out have to be done with no voltage present.

The transformer's surface is coated with a metallic compound that ensures a safe repartition of the magnetic field and zero-potential surface.

The anti-explosion system exclusively deals with secondary fault (short-circuit, maintained overload...). Under no circumstances it can handle a primary fault (overvoltage, ferroresonance, lightning, switching...)
This system must be associated with a cut-off relay. Maintaining feeding of VT would result in its destruction.

Technical data

Rated insulation level	From 3.6/16/45 kV to 36/70/170 kV
Primary voltage Upn	Up to 36 000/√3 V
Secondary voltage Usn	100/√3 - 110/√3 - 100/3 - 110/3 V
Frequency	50 or 60 Hz
Rated output	Up to 25 VA CL 0.2 - 50 VA CL 0.5 100 VA CL 1 - 200 VA CL 3
Accuracy class	0.1 - 0.2 - 0.5 -1 - 3 - 3P - 6P
Voltage factor	1,9 Upn 8h
Thermal limiting output	Up to 10 kVA
Surface finish	Metallic
Insulation class	E
Ambient temperature	- 5°C to + 40°C / 25°F to 100°F
Standards	IEC - IEEE - CSA - AS - BS - UNE

Other characteristics on request

Secondary voltage Usn	24/√3 to 380/√3 V
Voltage factor	1.5 Un 30s - 1,2Un
Secondary windings	Up to 3
Ambient temperature	- 25°C to + 70°C / -13°F to +160°F
Simultaneous loads	Measure and/or protection
Antiferroresonance	Low induction

Accessoires / Options

Fixing plate	Standard - Several options available
Surface finish	Silicone coating
Secondary terminal	Series waterproof terminal cover (IP65)
Finish bornier secondary	Optional cable
Earth connector	Option
Anti-explosion device	Option
Double primary ratio	Option
Up to 3 secondaries	Option

SINGLE PHASE 1-POLE PLUG-IN VOLTAGE TRANSFORMERS - OUTDOOR - E..G.. A/B/C/W SERIES

ONE INSULATED POLE - PHASE TO GROUND OUTDOOR TYPE											
E..G1..		E..G2..		E..G4..		E..G5..		E..G7..		E..G8..	
Drawing type											
Mod.01		Mod.01		Mod.02		Mod.02		Mod.01/02		Mod.02	
Dimensions. [mm].											
A:	280	A:	340	A:	332	A:	382	A:	500	A:	560
B:	255	B:	307	B:	317	B:	350	B:	458	B:	561
C:	148	C:	186	C:	225	C:	270	C:	335	C:	410
D:	120	D:	120	D:	120	D:	146	D:	200	D:	270
M: 25 kg.		M: 45 kg.		M: 55 kg.		M: 75 kg.		M: 135 kg.		M: 320 kg.	

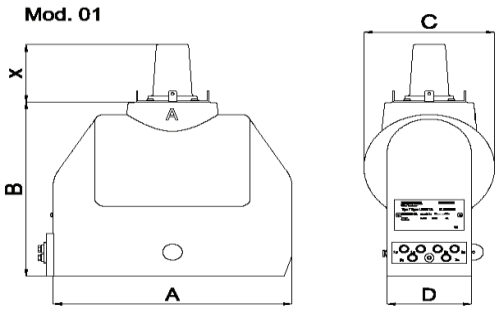

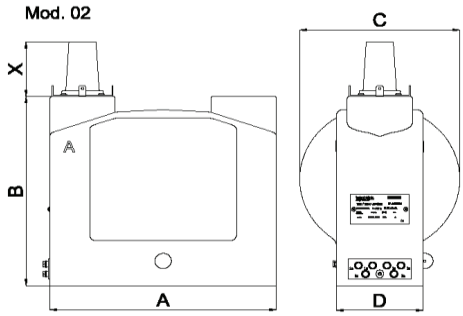

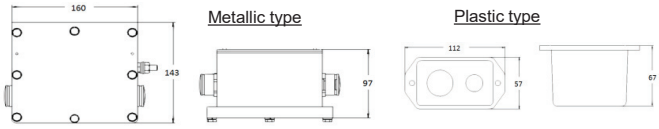

UNE-EN IEC 50181 H.V. PRIMARY TERMINAL TYPE

TYPE A - up to 24 kV.

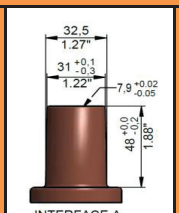

INTERFACE A
250A DESLIZANTE

TYPE B - up to 36 kV.

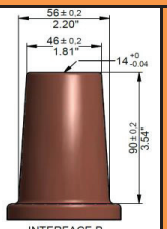

INTERFACE B
400A DESLIZANTE

TYPE C - up to 36 kV.

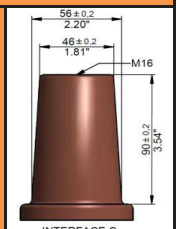

INTERFACE C
630A ATORNILLADO

IEEE Std. 386™ H.V. PRIMARY TERMINAL TYPE

TYPE W - up to 21.1kV.

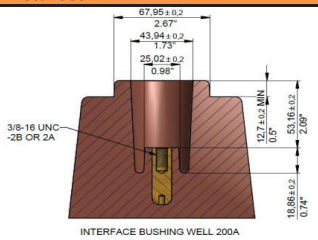

INTERFACE BUSHING WELL 200A

SECONDARY OUTPUT TERMINALS			
Taps:	M6 Screws	Cable:	2 / 3 / 4 / ... copper wire cable.

SECONDARY SEALABLE BOX	
Plastic type:	White - IP54 - holes: 1xPG11 + 1xPG21
Metallic type:	Inox - IP55 - holes: 2xPG21 / consult

UNE - EN IEC 61869 BURDEN AND CLASS

E..G1..				E..G2..				E..G4..				E..G5..				E..G7..				E..G8..			
Class				Class				Class				Class				Class				Class			
0.2	0.5	1	3	0.2	0.5	1	3	0.2	0.5	1	3	0.2	0.5	1	3	0.2	0.5	1	3	0.2	0.5	1	3
Up to ≤24 kV.				Up to ≤24 kV.				Up to ≤24 kV.				Up to ≤24 kV.				Up to ≤24 kV.				Up to ≤24 kV.			
Burden (VA.)				Burden (VA.)				Burden (VA.)				Burden (VA.)				Burden (VA.)				Burden (VA.)			
15	40	80	180	25	50	100	300	50	120	240	700	80	170	350	1100	400	900	1800	5500	500	1100	2200	6500
Pth.(VA): 250				Pth.(VA): 750				Pth.(VA): 1500				Pth.(VA): 1800				Pth.(VA): 8000				Pth.(VA): 10000			
Up to ≤36 kV.				Up to ≤36 kV.				Up to ≤36 kV.				Up to ≤36 kV.				Up to ≤36 kV.				Up to ≤36 kV.			
Burden (VA.)				Burden (VA.)				Burden (VA.)				Burden (VA.)				Burden (VA.)				Burden (VA.)			
-	-	-	-	20	45	90	250	45	90	200	600	55	130	260	750	350	850	1600	5000	500	1100	2200	6500
Pth.(VA): -				Pth.(VA): 400				Pth.(VA): 900				Pth.(VA): 1100				Pth.(VA): 7500				Pth.(VA): 10000			

IEEE C57.13-2016 BURDEN AND CLASS

TYPE	E15G2..	E15G5..	E25G2..	E25G5..	E35G2..	E35G5..
Description	VT 15kV. BIL 95kV		VT 25kV. BIL 125kV		VT 35kV. BIL 150kV	
Highest Voltage for the material	7.0-7.6 kV.		13.2-14.4 kV		19.1-20.7 kV	
Output Voltage	$100V_{AC}$ ~ $120V_{AC}$ according to customer specifications					
Lightning impulse withstand voltage	95 kV.		125 kV.		150 kV.	
DELTA / WYE	WYE		WYE		WYE	
Ratio	60:1		115:1		166:1	
Frequency	60 Hz.		60 Hz.		60 Hz.	
Weight	99lbs (45kg)	165lbs (75kg)	99lbs (45kg)	165lbs (75kg)	99lbs (45kg)	165lbs (75kg)
Thermal Burden	750 VA.	1500 VA.	750 VA.	1500 VA.	750 VA.	1500 VA.
Class / Burden	0.3 W X 0.6 W X M 1.2 W X M Y Z	0.3 W X M 0.6 W X M Y 1.2 W X M Y Z ZZ	0.3 W X 0.6 W X M 1.2 W X M Y Z	0.3 W X M 0.6 W X M Y 1.2 W X M Y Z ZZ	0.3 W 0.6 W X 1.2 W X M	0.3 W X M 0.6 W X M Y 1.2 W X M Y Z

BASE PLATES - FIXING BRACKETS

(all dimensions in mm.)

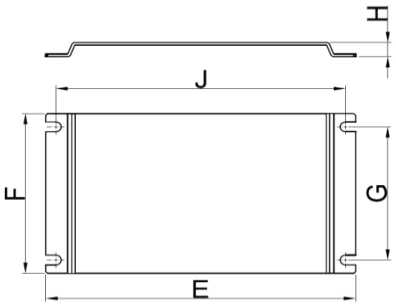

• Other base plates and fixing brackets upon request.

E..G1..				E..G2..				E..G4..				E..G5..				E..G7..				E..G8..			
E	F	G	J	E	F	G	J	E	F	G	J	E	F	G	J	E	F	G	J	E	F	G	J
310	180	150	290	433	186	165	300	310	180	150	290	340	290	240	270	600	340	300	500	700	420	370	670
H.: 16				H.: 5				H.: 16				H.: 17				H.: 20				H.: 20			
Fixation: 4 x Ø 11				Fixation: 4 x Ø 11				Fixation: 4 x Ø 11				Fixation: 4 x Ø 11				Fixation: 4 x Ø 12,5				Fixation: 4 x Ø 12,5			

Please, consult manufacturing options according to requested specifications