SINGLE PHASE 2-POLE VOLTAGE TRANSFORMER - U..B.. SERIES

UBH

UBHC

UBN

- ***Indoor***
- ***7.2 - 12 - 17.5 - 24 - 36 kV***
- ***Primary voltage up to 36.000 V***

Single phase 2-pole voltage transformers made of self extinguishing epoxy resin for the measure of AC voltages between phases up to 36 000 V.

This range is also suitable for the power supply of auxiliaries up to 5000VA clA.

The anti-explosion system exclusively deals with secondary fault (short-circuit, maintained overload...). Under no circumstances it can handle a primary fault (overvoltage, ferroresonance, lightning, switching...) This system must be associated with a cut-off relay. Maintaining feeding of VT would result in its destruction.

Technical data

Highest voltage for equipment	3.6/16/45 kV up to 36/70/170 kV
Primary voltage Upn	Up to 36.000 V
Secondary voltage Usn	100 - 110 - 120 - 230 V
Frequency	50 or 60 Hz
Rated output	Up to 100 VA CL 0.2 - 150 VA CL 0.5 200 VA CL 1
Accuracy class	0.1 - 0.2 - 0.5 -1 - 3 - 3P - 6P
Voltage factor	1.2 Un
Thermal limiting output	Up to 5000 VA
Insulation class	E
Ambient temperature	- 5°C to + 40°C
Standards	IEC - IEEE - CSA - AS - BS - UNE

Other characteristics on request

Secondary voltage Usn	10 to 600 V
Secondary windings	Up to 3
Ambient temperature	- 25°C to + 70°C
Simultaneous loads	Measure and/or protection
Voltage factor	1.2 Un - 1.5 Un 30s - 1.9 Un 8h

Accessories / Options

Fixing plate	Standard
Sealable cover for secondary terminal (IP31)	Standard
Surface finish	Polyurethane or Silicone coating
Earth connector	Option
Anti-explosion system	Option

SINGLE PHASE 2-POLE VOLTAGE TRANSFORMER - U..B.. SERIES

Selection table

Type	Un	Up	Rated output			Thermal output
	Up to (kV.)	Up to (kV.)	Max (VA)			Up to (VA)
			cl 0.5	cl 1	cl 3	
U7BH	7.2/20/60	6.6	50	100	150	300
U7BM	7.2/20/60	6.6	100	200	350	400
U7DM	7.2/20/60	6.6	150	250	450	1000
U7BN	7.2/20/60	6.6	200	400	700	2500
U7CO	7.2/20/60	6.6	300	600	1000	3500
U12BH	12/28/75	11	50	100	150	300
U12BM	12/28/75	11	100	200	350	400
U12DM	12/28/75	11	150	250	450	1000
U12BN	12/28/75	11	200	400	700	2500
U12CO	12/28/75	11	300	600	1000	3500
U17BH	17.5/38/95	16.5	50	100	150	300
U17BM	17.5/38/95	16.5	100	200	350	400
U17DM	17.5/38/95	16.5	150	250	450	1000
U17BN	17.5/38/95	16.5	200	400	700	2500
U17CO	17.5/38/95	16.5	300	600	1000	3500
U24BH	24/50/125	22	50	100	150	300
U24BM	24/50/125	22	100	200	350	400
U24DM	24/50/125	22	150	250	450	1000
U24BN	24/50/125	22	200	400	700	2500
U24CO	24/50/125	22	300	600	1000	3500
U36DM	36/70/170	35	150	250	450	1000
U36BN	36/70/170	35	200	400	700	2500
U36CO	36/70/170	35	300	600	1000	3500

Dimensions

Type	Weight	A	B	C	D	F	G	J	K	M	N
	kg	mm	mm	mm	mm	mm	mm	mm	mm	mm	mm
U7BH	30	180	280	190	310	290	150	47	24	165	130
U7BM	34	178	285	240	411	290	150	35	24	165	130
U7DM	40	178	290	220	349	240	150	21	60	251	-
U7BN	34	230	415	220	380	350	200	35	24	325	-
U7CO	60	230	341	370	441	350	200	26	23	320	100
U12BH	30	180	280	190	310	290	150	47	24	165	130
U12BM	34	178	285	240	411	290	150	35	24	165	130
U12DM	40	178	290	220	349	240	150	21	60	251	-
U12BN	34	230	415	220	380	350	200	35	24	325	-
U12CO	60	230	341	370	441	350	200	26	23	320	100
U17BH	30	180	280	190	310	290	150	47	24	165	130
U17BM	34	178	285	240	411	290	150	35	24	165	130
U17DM	40	178	290	220	349	240	150	21	60	251	-
U17BN	34	230	415	220	380	350	200	35	24	325	-
U17CO	60	230	341	370	441	350	200	26	23	320	100
U24BH	30	180	280	190	310	290	150	47	24	165	130
U24BM	34	178	285	240	411	290	150	35	24	165	130
U24DM	40	178	290	220	349	240	150	21	60	251	-
U24BN	34	230	415	220	380	350	200	35	24	325	-
U24CO	60	230	341	370	441	350	200	26	23	320	100
U36DM	40	178	290	220	349	240	150	21	60	251	-
U36BN	34	230	415	220	380	350	200	35	24	325	-
U36CO	60	230	341	370	441	350	200	26	23	320	100

Installation

- This voltage transformer can be fixed in any position.
- Tightening torque for primary terminals 35 N.m
- Primary terminals M12x23 useful depth.
- Tightening torque for secondary terminals : M6 :4 N.m
- This voltage transformer is maintenance free.

UBHA-UBMA

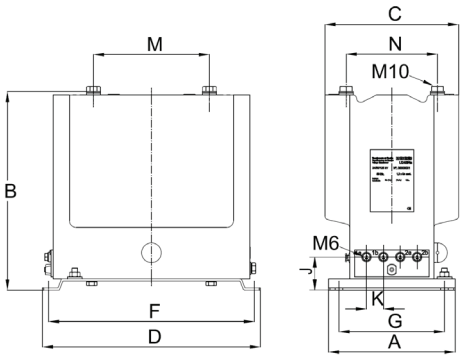

UBNA

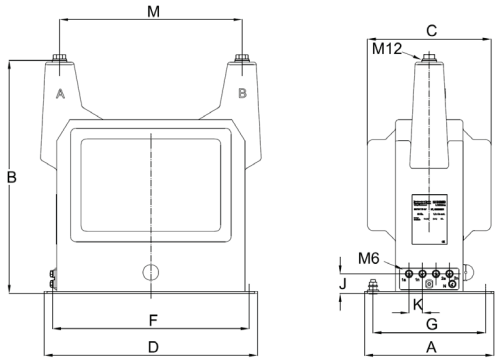

UCOA

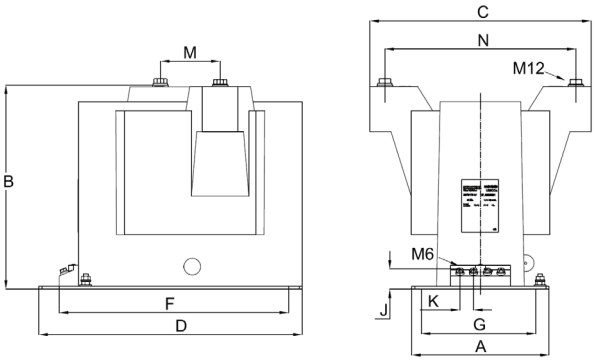
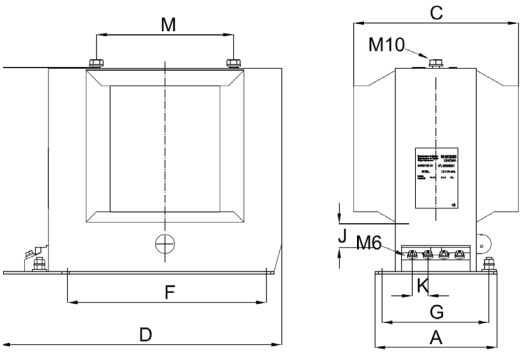
UDMA