SINGLE PHASE 1 OR 2-POLE VOLTAGE TRANSFORMERS WITH FUSE - UT - CT SERIES

UT20

CT15

- ***Indoor***
- ***3.6 - 7.2 - 12 - 17.5 - 24 - 36 kV***
- ***With 1 or 2 HBC protection fuses***
- ***Compact size***

1 or 2-pole voltage transformers vacuum moulded in self extinguishing epoxy resin for the measurement of AC voltages between phases or between phase and earth up to 36kV.

These compact voltage transformers are equipped with 1 or 2 protection fuses of 6.3A rating.

They are also suitable for the power supply of auxiliaries up to 2500VA CLA.

Technical data

Rated insulation level	3.6/16/45 kV to 36/70/170 kV
Primary voltage Upn	Up to 33 000/√3 V
Secondary voltage Usn	100/√3 V - 110/√3 V
Frequency	50 or 60 Hz
Rated output	Up to 100 VA CL0.2 - 150 VA CL0.5 300 VA CL1
Accuracy class	0.1 - 0.2 - 0.5 - 1 - 3 - 3P - 6P
Voltage factor	1.2 Upn for double poles 1.9 Upn 30s for single pole
Thermal limiting output	Up to 2500 VA
Insulation class	E
Fuses	6.3 A
Ambient temperature	- 25°C to + 40°C
Standards	IEC- IEEE - CSA - AS - BS

Other characteristics on request

Secondary voltage Usn	10 to 400 V
Voltage factor	1.9 Upn 8h for single pole
Ambient temperature	- 40°C to + 70°C
Secondary windings	Up to 3 separate secondary windings
Residual voltage windings	100/3 V - 50 VA CL3 - Delta connection on a 68.1 Ω - 150 W resistor

SINGLE PHASE 1 OR 2-POLE VOLTAGE TRANSFORMERS WITH FUSE - UT - CT SERIES

Model	Type	Un	Up	Max rated output VA			Thermal output
		kV	*kV*	*cl0.5*	*cl1*	*cl3*	*VA*
UT20	1-pole	24/50/125	Up to 22/√3	100	150	400	Up to 750
UT15	1-pole	24/50/125	Up to 22/√3	150	250	1000	Up to 1500
CT12	2-poles	12/28/75	Up to 11	100	200	600	Up to 1000
CT15	2-poles	24/50/125	Up to 22	150	250	1000	Up to 1500
CT30	2-poles	36/70/170	Up to 35	150	300	1000	Up to 2500

Model	Weight	A	B	C	D	E	F	H	J	K	Q
	kg	*mm*	*mm*	*mm*	*mm*	*mm*	*mm*	*mm*	*mm*	*mm*	*mm*
UT20	28	300	175	342	302	290	190	42	-	40	66
UT15	35	350	198	380	340	290	300	50	-	40	60
CT12	31	305	260	320	280	200	190	50	178	40	65
CT15	45	350	260	349	307	290	300	50	178	40	60
CT30	80	420	260	475	430	392	265	50	170	40	60

UT

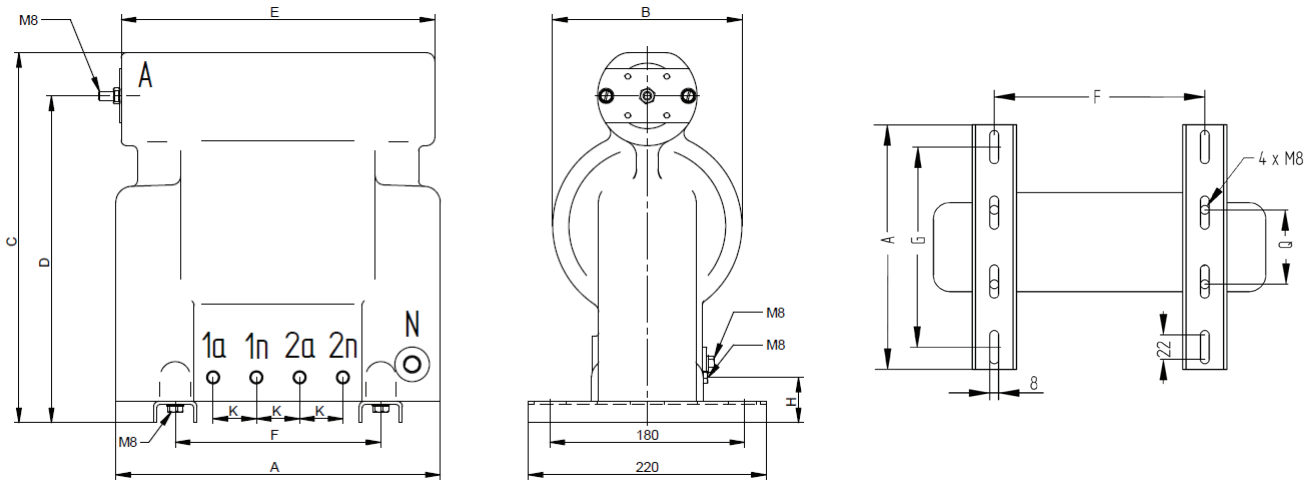

CT

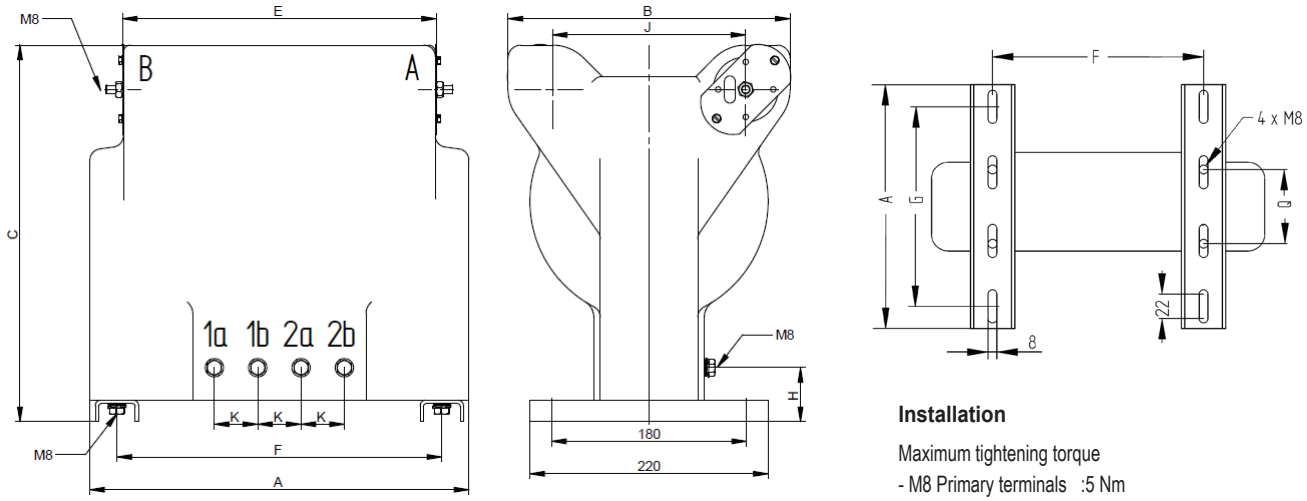

Installation

Maximum tightening torque

- M8 Primary terminals :5 Nm
- M8 Secondary terminals & fixing screws : 13 Nm