DAMPING REACTORS

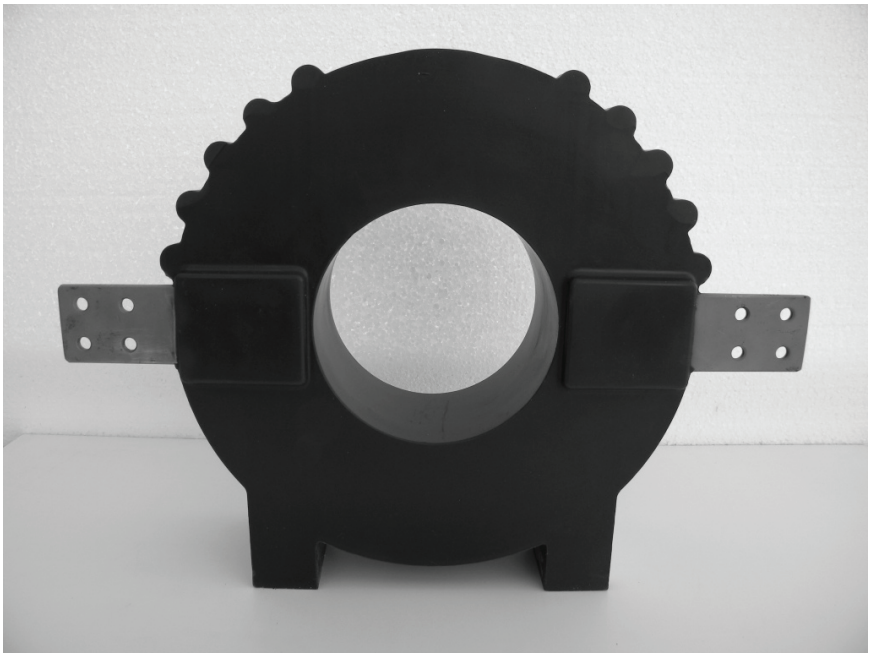

SA

- ***Indoor or outdoor***
- ***Cast resin***
- ***From 3.6 to 36 kV.***
- ***Without magnetic core***

Series or damping reactors for medium voltage are encapsulated in epoxy resin. They are without magnetic core.

The damping reactors SA, SB and SC type limit current transients and surge currents to acceptable levels for the capacitor units and corresponding control systems.

Damping reactors are necessary in the following cases:
- *Capacitor banks with several steps*
- *Several capacitor banks connected in the same busbar*
- *Very high network short-circuit power in relation to the power of the capacitor bank to be connected*
- *Frequent capacitor bank operations*

The main advantage of using damping reactors is the increase of equipment and capacitor units' life

Aluminum instead of copper is an option providing significant savings in weight and cost.

Technical data

Rated insulation level	3.6/16/45 kV to 36/70/170 kV
Frequency	50 or 60 Hz
Impedance	Up to 1000 µH
Rated current	Up to 650A
Main conductor	Copper
Short-time thermal current Ith	43In-1s or 25In-3s
Insulation class	E
Ambient temperature	-25°C to +40 °C
Standards	IEC - IEEE - CSA - AS - BS

Other characteristics on request

Short time thermal current Ith	Up to 500In.1s
Main conductor	Aluminum
Ambient temperature	-40°C to +70°C

Accessories / Options

Insulators ISO	See datasheet M2VN

Selection table and dimensions

Type	Un kV	In max A	Material	Weight kg	A mm	B mm	C mm	D mm	E mm	F mm	G mm	With ISO insulator
SA	12	650*	copper	20	150	310	175	200	110	80	450	24 kV
	12	650*	aluminum	10	150	310	175	200	110	80	450	24 kV
SB	12	650*	copper	32	150	330	185	200	110	80	470	24 kV
	12	650*	aluminum	16	150	330	185	200	110	80	470	24 kV
SC	12	650*	copper	47	150	400	220	200	120	80	540	36 kV
	12	650*	aluminum	24	150	400	220	200	120	80	540	36 kV

* 650 is the maximum current with harmonic distortion of 30%

SELF - SA - SB - SC

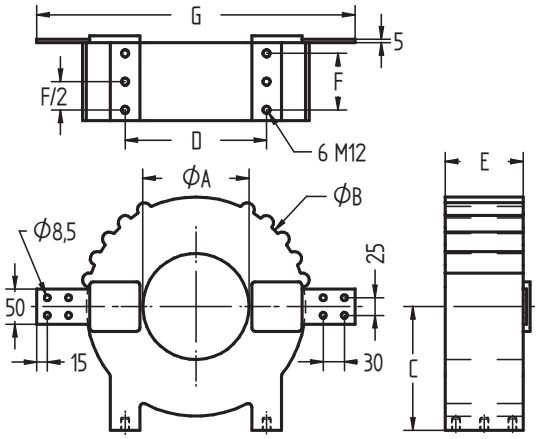

Installation

Tightening torque M12 inserts: 20 Nm
M16 inserts: 25 Nm

SELF - SA - SB - SC WITH INSULATORS ISO OPTION

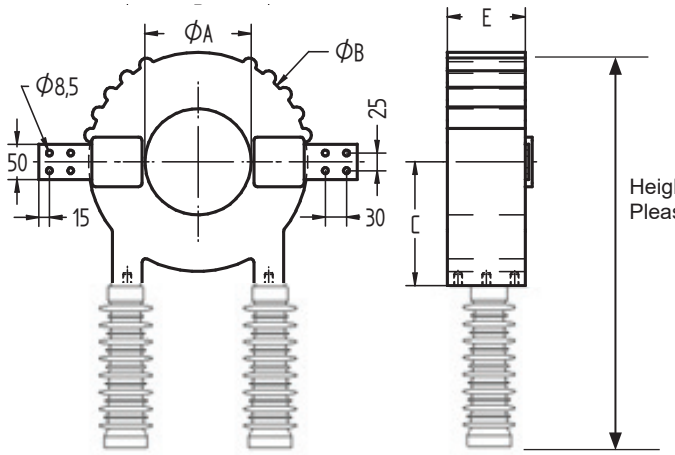

Height depending on the type of insulator.
Please contact us