SINGLE PHASE 1-POLE PLUG-IN VOLTAGE TRANSFORMERS U26E SERIES

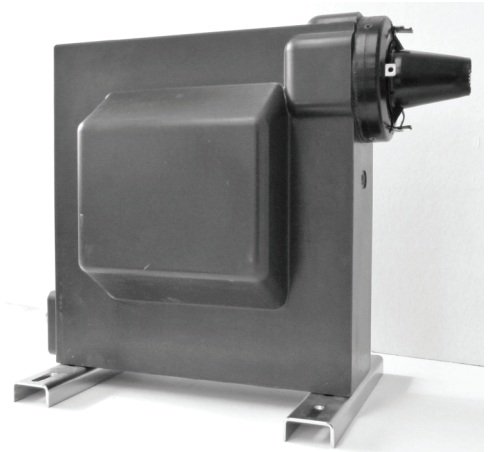

U26E

- ***Indoor or outdoor***
- ***3.6 - 7.2 - 12 - 17.5 - 24 kV***

1-pole voltage transformer vacuum moulded in self extinguishing epoxy resin for the measurement of AC voltages between phase and earth up to 24kV.

This voltage transformer is equipped with a bushing 24kV-250A type A according to NFC35-051 EN50180 and EN50181.
The user connects an insulated cable equipped with an elbow or straight connector 24kV-250A - interface type A.

Plug-in and plug-out have to be done with no voltage.

An outdoor version is also available, with secondary terminals protected by a weatherproof cover.

Technical data

Rated insulation level	3.6/16/45 kV to 24/50/125 kV
Primary voltage Upn	Up to 24000 :√3 V
Secondary voltage Usn	100 :√3 - 110 :√3 V
Frequency	50 or 60 Hz
Rated output	Up to 50 VA CL0.5 - 100 VA CL1 - 250 VA CL3
Accuracy class	0.1 - 0.2 - 0.5 - 1 - 3 - 3P - 6P
Voltage factor	1.9Upn 30s
Thermal limiting output	Up to 500 VA
Insulation class	E
Ambient temperature	- 25 °C to + 40 °C
Standards	IEC - IEEE - CSA - AS - BS

Other characteristics on request

Secondary voltage Usn	10 to 400 V
Voltage factor	1.9Upn 8h
Double ratio	By secondary tapping
Secondary windings	Up to 3 separate secondary windings indoor type
Ambient temperature	- 40°C to + 70°C

Accessories / Options

Weatherproof cover (IP54)	Standard on outdoor version

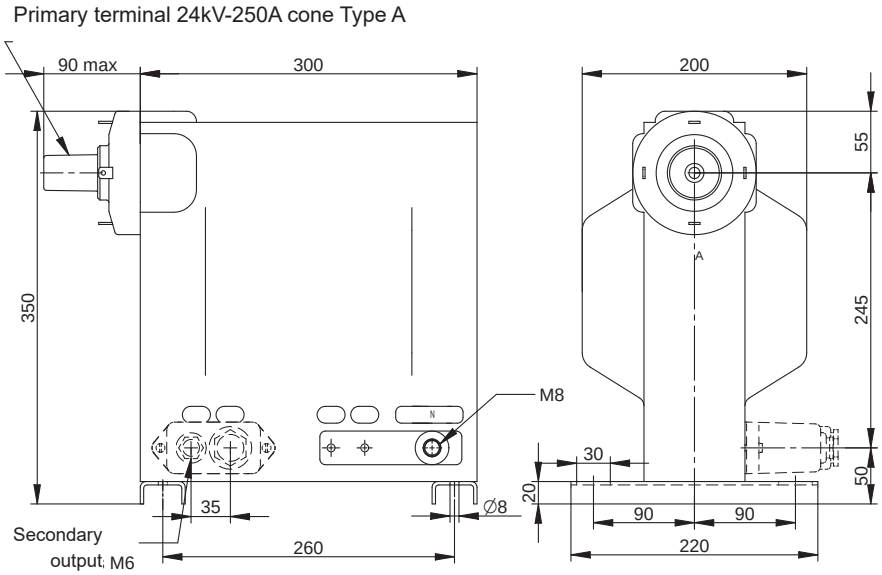

Installation

Tightening torque
terminal M6 : 2 Nm