BAR OR CABLE PRIMARY CURRENT TRANSFORMERS HT SERIES

HT350

- ***Indoor***
- ***7.2 - 12 - 17.5 - 24 kV***
- ***Primary current from 100 to 30000 A***
- ***Cast resin insulated***
- ***Inner diameter from 165 to 800 mm***
- ***Ith Up to 1000 Ipn***

Current transformers vacuum moulded in self extinguishing epoxy resin for the measurement of AC currents from 100 to 30000A.

This range of transformers is suitable for power generation. They have been designed to be installed in bus ducts between generator and transformer.

They allow very high performances.

Technical data

Rated insulation level	7.2/20/60 kV to 24/50/125 kV
Primary current Ipn	100 to 30000 A
Secondary current Isn	5 or 1 A
Frequency	50 or 60 Hz
Rated output	1 to 1000 VA
Accuracy class	0.1 - 0.2 - 0.2S - 0.5 - 0.5S - 1 - 3 - 5P - 10P -CLX
Accuracy limit factor	5 - 10 - 15 - 20 - 30 - 50
Continuous thermal current	1.2 Ipn
Short-time thermal current Ith	80 to 1000 Ipn
Dynamic current Idyn	2.5 Ith
Insulation class	E
HV primary screen (see installation)	Standard on all transformers
Ambient temperature	- 25°C to + 40°C
Standards	IEC - IEEE - CSA - AS - BS

Other characteristics on request

Rated insulation level	25/50/150 kV
Secondary current	0.005 to 10 A
Multiple cores	Up to 3 separate cores
Ambient temperature	- 40°C to + 70°C

Selection table and dimensions

Type	Un *kV*	Weight *Kg*	A *mm*	B *mm*	C *mm*	D *mm*	E *mm*	H *mm*	φ°
HT 165 A	24/50/125	120	634	165	604	653	166	166	60°
HT 165 B	24/50/125	130	634	165	604	653	166	190	60°
HT 165 C	24/50/125	140	634	165	604	653	166	230	60°
HT 165 D	24/50/125	145	634	165	604	653	166	300	60°
HT 165.200	24/50/125	130	634	200	604	653	166	190	60°
HT 296.200A	24/50/125	80	596	200	476	610	135	135	45°
HT 296.200B	24/50/125	110	596	200	476	610	135	250	45°
HT 165.230	24/50/125	120	634	230	604	653	166	190	60°
HT 296.250	24/50/125	60	596	250	476	610	135	135	45°
HT 296	17.5/38/95	55	596	296	476	610	135	135	45°
HT 350A	24/50/125	53	733	350	640	750	110	110	45°
HT 350B	24/50/125	86	733	350	640	750	110	160	45°
HT 384	24/50/125	120	794	384	704	800	161	161	60°
HT 420	24/50/125	55	800	420	640	815	110	110	60°
HT 421	24/50/125	70	800	420	640	815	110	120	60°
HT 470	24/50/125	130	880	470	780	892	155	155	60°
HT 600 A	24/50/125	100	1007	600	840	1015	82	122	60°
HT 600 B	24/50/125	140	1007	600	1015	1026	122	207	60°
HT 800	24/50/125	120	1210	800	1062	1214	130	130	60°

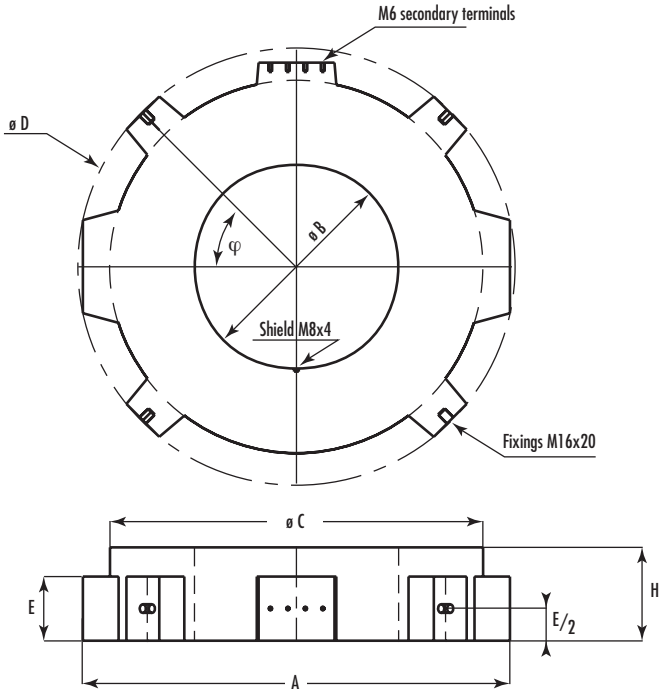

Installation

- Useful depth of M16 inserts = 20mm
- The HV primary screen must be connected to the busbar by a flexible connection.
- The fixing fittings on the outer diameter must allow for transformer expansion.

- Tightening torque
  - terminal M6 : 2 N.m
  - terminal M8 : 4 N.m
  - terminal M16 : 18 N.m