SINGLE PHASE 1-POLE VOLTAGE TRANSFORMERS RU SERIES

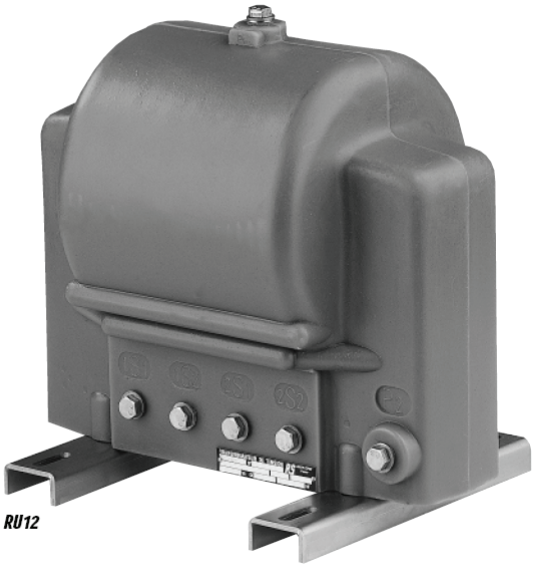

RU12

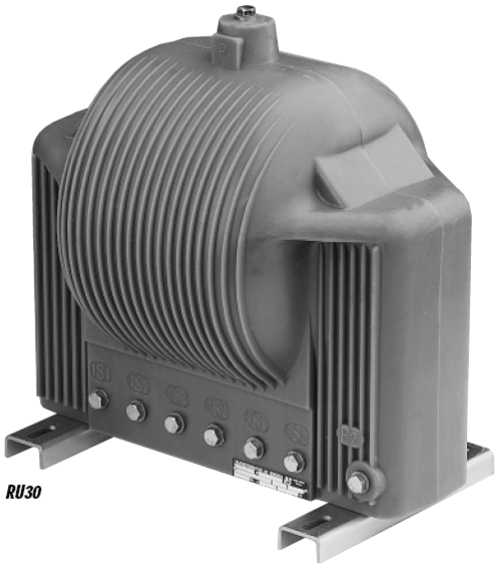

RU30

- ***Indoor***
- ***7.2 - 12 - 17.5 - 24 - 36 - 52 kV***
- ***Primary voltage up to 50000 /√3 V***

Single pole voltage transformer vacuum moulded in self extinguishing epoxy resin for the measurement of AC voltages between phase and earth up to 50000 : √3 V.

This range is also suitable for the power supply of auxiliairies up to 5KVA CLA.

Technical data

Rated insulation level	3.6/16/45 kV to 52/95/250 kV
Primary voltage Upn	Up to 50000 : √3 V
Secondary voltage Usn	100 : √3 - 110 : √3 V
Frequency	50 or 60 Hz
Rated output	Up to 200 VA CL0.2 - 500 VA CL0.5 - 1000 VA CL1
Accuracy class	0.1 - 0.2 - 0.5 - 1 - 3 - 3P - 6P
Voltage factor	1.9 Upn 30s
Thermal limiting output	Up to 5000 VA
Insulation class	E
Ambient temperature	- 25°C to + 40°C
Standards	IEC - IEEE - CSA - AS - BS

Other characteristics on request

Secondary voltage Usn	24/√3 to 380/√3 V
Voltage factor	1.9 Upn 8h
Secondary windings	Up to 3 secondary windings
Residual voltage winding	100/3 V 50VA cl3 - Delta connection on a 68.1Ω or 150W resistor
Ambient temperature	- 40°C to + 70°C

SINGLE PHASE 1-POLE VOLTAGE TRANSFORMERS - RU SERIES

Model	Un	Up	Max rated output VA			Thermal output
	kV	kV	cl0,5	cl1	cl3	VA
RU7	7.2/20/60	Up to 6.6/√3	60	100	150	Up to 300
RU10M	12/28/75	Up to 11/√3	60	100	150	Up to 300
RU12	24/50/125	Up to 22/√3	100	200	600	Up to 1000
RU15	24/50/125	Up to 22/√3	200	300	1000	Up to 1500
RU30	36/70/170	Up to 35/√3	150	300	1000	Up to 2500
RU26	36/70/170	Up to 35/√3	500	1000	2000	Up to 5000
RU27	36/70/170	Up to 35/√3	500	1000	2000	Up to 5000
RU45	52/95/250	Up to 50/√3	100	150	500	Up to 4000

Model	Weight kg	A mm	B mm	C mm	D mm	F mm	G mm	H mm	J mm	K mm	Q mm
RU7	16	220	205	120	270	185	180	33	33	35	75
RU10M	16	220	246	159	276	185	180	50	50	40	67
RU12	27	220	285	186	300	190	180	50	50	40	67
RU15	34	220	300	210	350	300	180	58	50	40	60
RU30	49	220	370	260	378	280	180	50	50	40	75
RU26	90	236	415	265	417	305	196	50	50	40	108
RU27	95	236	435	310	420	305	196	58	50	40	108
RU45	90	220	535	300	450	325	180	80	50	40	40

RU7

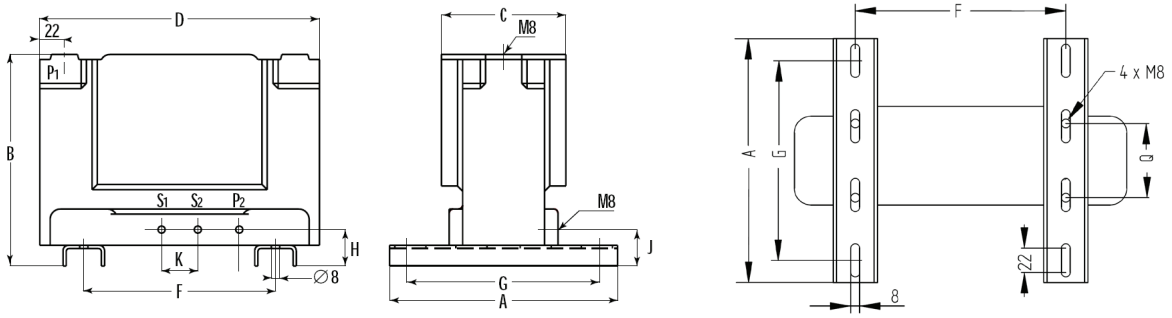

RU10M

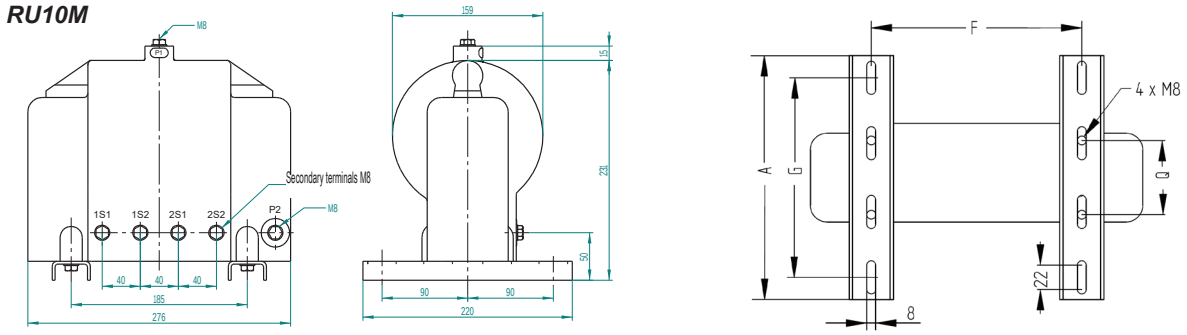

RU26-RU27

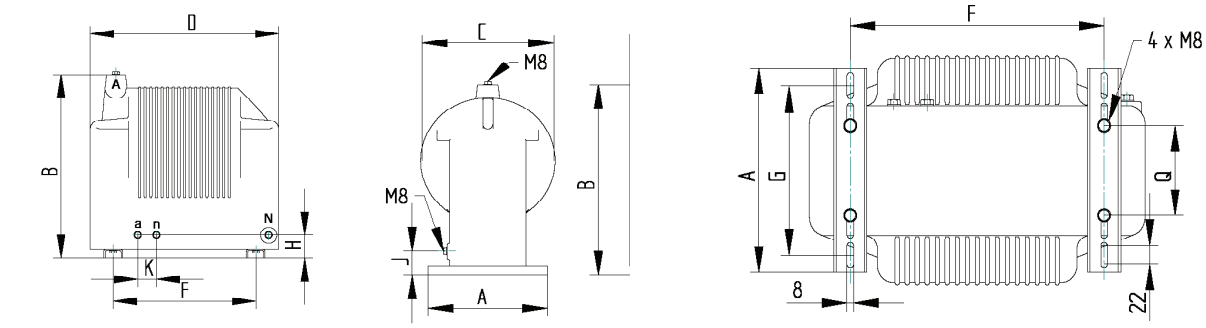

RU12-RU15-RU45

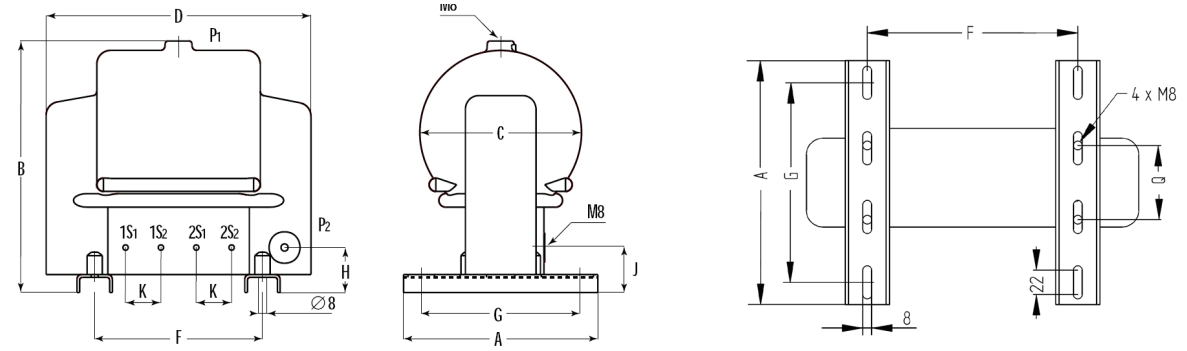

Installation:

Tightening torque terminal M8 : 13N.m