SINGLE PHASE 1-POLE VOLTAGE TRANSFORMER - E..B.. SERIES

EBF

EBL

EBM

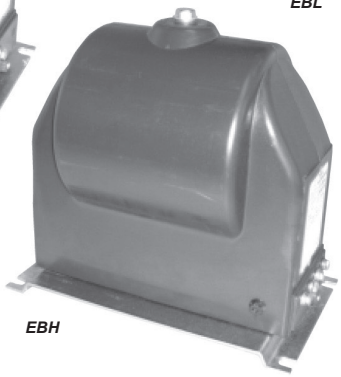
EBH

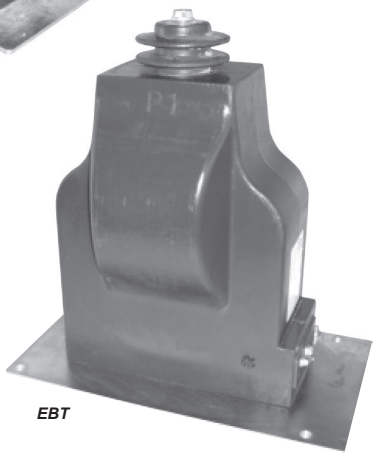
EBT

- ***Indoor***
- ***7.2 - 12 - 17.5 - 24 - 36 kV***
- ***Primary voltage up to 36 000/√3 V***

Single phase 1-pole voltage transformers made of self extinguishing epoxy resin for the measure of AC voltages between phase and earth up to 36 000/√3 V.

This range is also suitable for the power supply of auxiliaries up to 1500VA CLA.

The anti-explosion system exclusively deals with secondary fault (short-circuit, maintained overload...). Under no circumstances it can handle a primary fault (overvoltage, ferroresonance, lightning, switching...)
This system must be associated with a cut-off relay. Maintaining feeding of VT would result in its destruction.

Technical data

Highest voltage for equipment	3.6/16/45 kV up to 36/70/170 kV
Primary voltage Upn	Up to 36 000 /√3V
Secondary voltage Usn	100/√3 - 110/√3 - 100/3 - 110/3 V
Frequency	50 or 60 Hz
Rated output	Up to 100 VA CL 0.2 - 300 VA CL 0.5 450 VA CL 1
Accuracy class	0.1 - 0.2 - 0.5 -1 - 3 - 3P - 6P
Voltage factor	1.9 Upn 8 h
Thermal limiting output	Up to 1500 VA
Insulation class	E
Ambient temperature	- 5°C to + 40°C
Standards	IEC - IEEE - CSA - AS - BS - UNE

Other characteristics on request

Secondary voltage Usn	From 24/√3 up to 380/√3 V
Voltage factor	1.5 Un 30s - 1.2 Un
Secondary windings	Up to 3
Ambient temperature	- 25°C to + 70°C
Simultaneous loads	Measure and/or protection

Accessories / Options

Fixing plate	Standard
Sealable cover for secondary terminal (IP31)	Standard
Surface finish	Polyurethane or Silicone coating
Earth connector	Option
Anti-explosion system	Option

SINGLE PHASE 1-POLE VOLTAGE TRANSFORMER - E36B SERIES

Selection table

Type	Un Up to (kV.)	Up Up to (kV.)	Rated output Up to (VA)				Thermal output Up to (VA)
			cl 0.2	cl 0.5	cl 1	cl 3	
E7BFA	7.2/20/60	6.6:√3	15	30	60	120	250
E7BHA	7.2/20/60	6.6:√3	35	80	150	250	350
E7BMA	7.2/20/60	6.6:√3	60	125	225	400	500
E7BTA	7.2/20/60	6.6:√3	40	80	160	320	600
E7BLA	7.2/20/60	6.6:√3	100	200	400	800	1500
E12BFA	12/28/75	11:√3	15	30	60	120	250
E12BHA	12/28/75	11:√3	35	80	150	250	350
E12BMA	12/28/75	11:√3	60	125	225	400	500
E12BTA	12/28/75	11:√3	40	80	160	320	600
E12BLA	12/28/75	11:√3	100	200	400	800	1500
E17BFA	17.5/38/95	16.5:√3	15	30	60	120	250
E17BHA	17.5/38/95	16.5:√3	35	80	150	250	350
E17BMA	17.5/38/95	16.5:√3	60	125	225	400	500
E17BTA	17.5/38/95	16.5:√3	100	200	400	800	1500
E17BLA	17.5/38/95	16.5:√3	40	80	160	320	600
E24BFA	24/50/125	22:√3	15	30	60	120	250
E24BHA	24/50/125	22:√3	35	80	150	250	350
E24BMA	24/50/125	22:√3	60	125	225	400	500
E24BTA	24/50/125	22:√3	40	80	160	320	600
E24BLA	24/50/125	22:√3	100	200	400	800	1500
E36BTA	36/70/170	33:√3	35	75	150	300	600
E36BLA	36/70/170	33:√3	75	150	300	600	1500

Dimensions

Type	Weight kg	A mm	B mm	C mm	D mm	F mm	G mm	J mm	K mm
E7BFA	23	180	282	148	310	290	150	47	24
E7BHA	25	180	280	186	310	290	150	47	24
E7BMA	41	178	284	240	411	290	150	35	24
E7BTA	37	230	407	232	447	350	200	35	24
E7BLA	61	228	410	232	410	350	200	51	24
E12BFA	23	180	282	148	310	290	150	47	24
E12BHA	25	180	280	186	310	290	150	47	24
E12BMA	41	178	284	240	411	290	150	35	24
E12BTA	37	230	407	232	447	350	200	35	24
E12BLA	61	228	410	232	410	350	200	51	24
E17BFA	23	180	282	148	310	290	150	47	24
E17BHA	25	180	280	186	310	290	150	47	24
E17BMA	41	178	284	240	411	290	150	35	24
E17BTA	37	230	407	232	447	350	200	35	24
E17BLA	61	228	410	232	410	350	200	51	24
E24BFA	23	180	282	148	310	290	150	47	24
E24BHA	25	180	280	186	310	290	150	47	24
E24BMA	41	178	284	240	411	290	150	35	24
E24BTA	37	230	407	232	447	350	200	35	24
E24BLA	61	228	410	232	410	350	200	51	24
E36BTA	37	230	407	232	447	350	200	35	24
E36BLA	61	228	410	232	410	350	200	51	24

Installation

- This voltage transformer can be fixed in any position.
- Tightening torque for primary terminals 35 N.m
- Primary terminals M12x23 useful depth.
- Tightening torque for secondary terminals : M6 :4 N.m
- This voltage transformer is maintenance free.

EBFA

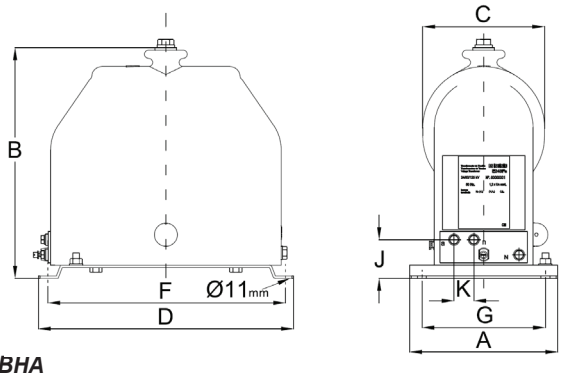

EBHA

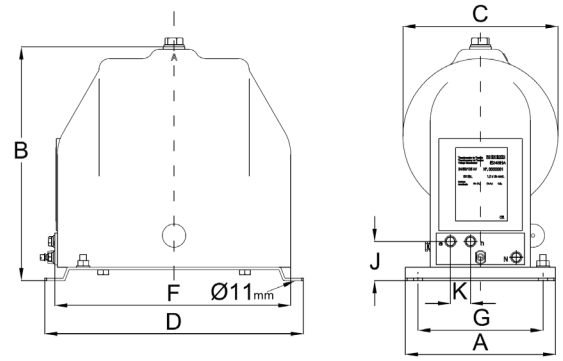

EBMA

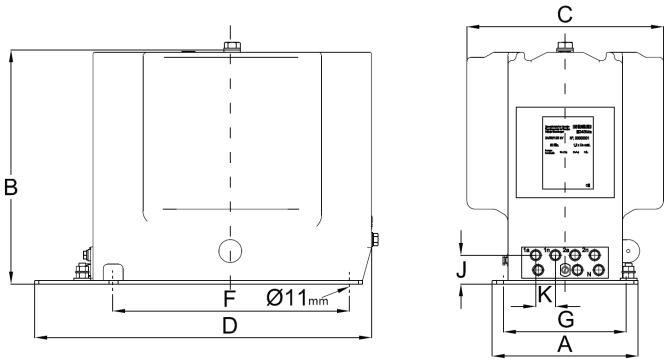

EBTA

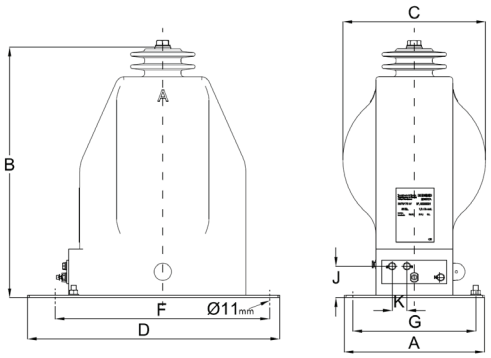
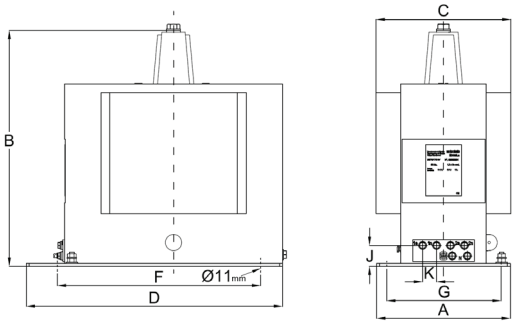
EBLA