SINGLE PHASE 2-POLE OUTDOOR VOLTAGE TRANSFORMERS U..G.. R/P/G/M/V SERIES

Denomination example :

U	2 4	G 4	P

- P — Primary terminal type.
- G 4 — Mould type denomination.
- 2 4 — Highest Voltage for the equipement (Um)
- U — Type of primary connection.
  - U phase to phase connection
  - E phase to earth connection

U24G4P

- **Outdoor**
- **7.2 - 12 - 17.5 - 24 - 36 - 52 kV**
- **Primary voltage up to 52 kV**

2-pole voltage transformer vacuum moulded in self extinguishing epoxy resin for the measure of AC voltages between phases up to 52 000 V.

This series also allows for feeding auxiliaries up to 10 000 VA CLA.

A metallic coating ensures a safe distribution of the magnetic field and zero-potential surface.

The anti-explosion system exclusively deals with secondary fault (short-circuit, maintained overload...). Under no circumstances it can handle a primary fault (overvoltage, ferroresonance, lightning, switching...)
This system must be associated with a cut-off relay. Maintaining feeding of VT would result in its destruction.

Technical data

Rated insulation level	From 3.6/16/45 kV to 52/95/250 kV
Primary voltage Upn	Up to 52 000 V
Secondary voltage Usn	100 - 110 V
Frequency	50 or 60 Hz
Rated output	Up to 200 VA CL 0.5 - 400 VA CL 1 - 1000 VA CL 3
Accuracy class	0.1 - 0.2 - 0.5 -1 - 3 - 3P - 6P
Voltage factor	1.9 Upn 8h
Thermal limiting output	Up to 10 000 VA
Surface finish	Touch-proof (deadtank) or Polyurethane
Fixing plate	Standard
Sealable cover for secondary terminal (IP65)	Standard
Insulation class	E
Ambient temperature	- 5°C to + 40°C
Standards	IEC - IEEE - CSA - AS - BS - UNE

Other characteristics on request

Secondary voltage Usn	10 to 600V
Secondary windings	Up to 3
Voltage factor	1.9 Upn 30s - 1.5 Un 30s - 1.9 Un 8h
Ambient temperature	- 25°C to + 70°C
Application	Measure and/or protection
Antiferroresonance	Low induction

Accessories / Options

Surface finish	Silicone coating
Earth connector	Option
Anti-explosion system	Option

SINGLE PHASE 2-POLE OUTDOOR VOLTAGE TRANSFORMERS - U..G.. R/P/G/M/V SERIES

MODELS CAPACITY / VOLUME

U..G3..					U..G5..					U..G7..					U..G8..				
MAXIMUM SECONDARY Nº																			
1 , 2 or 3					1 , 2 or 3					1 , 2 or 3					1 , 2 or 3				
MAXIMUM TOTAL BURDEN [VA].																			
Up kV.	cl.0,2	cl.0,5	cl.1	cl.3	Up kV.	cl.0,2	cl.0,5	cl.1	cl.3	Up kV.	cl.0,2	cl.0,5	cl.1	cl.3	Up kV.	cl.0,2	cl.0,5	cl.1	cl.3
≤24	25	50	100	250	≤24	100	250	500	1500	≤24	450	1000	2000	6000	≤24	500	1200	2400	7000
	Pth.[VA.]:		350			Pth.[VA.]:		2100			Pth.[VA.]:		8500			Pth.[VA.]:		10000	
36	-	-	-	-	36	60	130	280	900	36	350	850	1700	5000	36	500	1200	2400	7000
	Pth.[VA.]:		-			Pth.[VA.]:		1200			Pth.[VA.]:		7500			Pth.[VA.]:		10000	
52	-	-	-	-	52	-	-	-	-	52	150	350	700	2000	52	200	400	800	2400
	Pth.[VA.]:		-			Pth.[VA.]:		-			Pth.[VA.]:		3500			Pth.[VA.]:		3200	
mm.	A	B	C	D	mm.	A	B	C	D	mm.	A	B	C	D	mm.	A	B	C	D
	332	317	225	120		382	350	270	146		500	458	335	200		560	561	410	270
M:	45 kg.				M:	65 kg.				M:	135 kg.				M:	320 kg.			

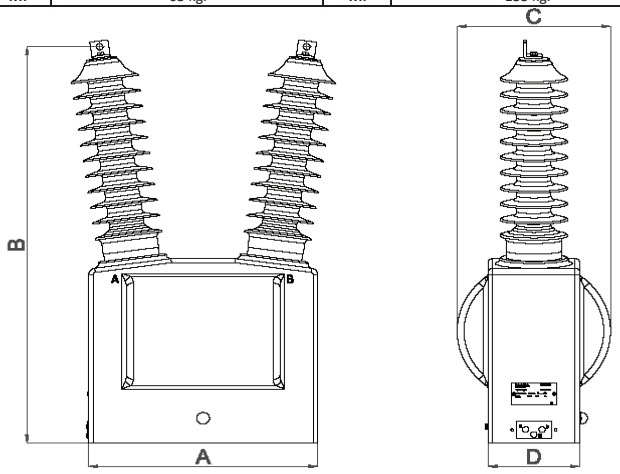

PRIMARY TERMINALS

R	P	G	M	V

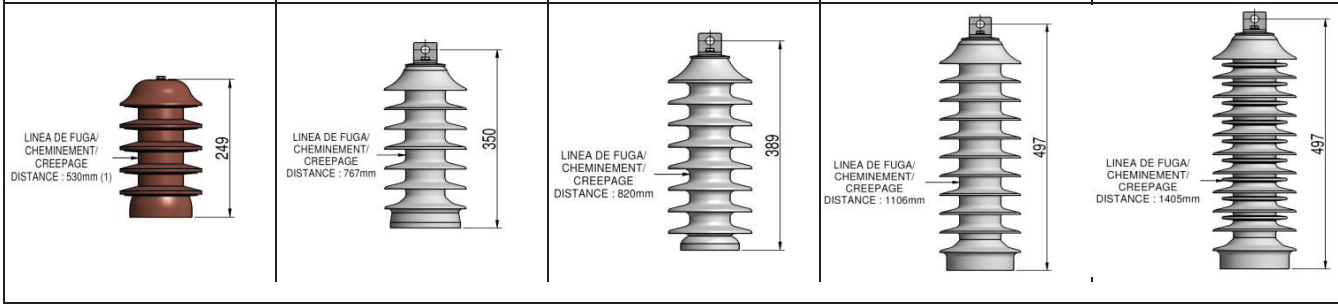

SECONDARY TERMINALS

PLASTIC BOX		METALLIC BOX				CABLE
Taps:	M6 Screws	Taps:	M6 Screws	Taps:	M6 Screws	2 / 3 / 4 / ... copper wire cable. Different cross section depending on maximal burden. With or without Ground wire. V0 capable.
Protection: (Optional)	White Sealable box	Protection: (Optional)	Stainless Steel	Protection: (Optional)	Stainless Steel	
	IP65		IP53		IP54	
	PG11+PG21 tap		2x PG21 + 2x breather + ground		2x PG16 + 1x breather	

SURFACE FINISH / COATING

Metallic coating / Touchproof	Polyurethane Coating	Silicone Coating

STANDARD BASE PLATES / FIXING BRACKETS

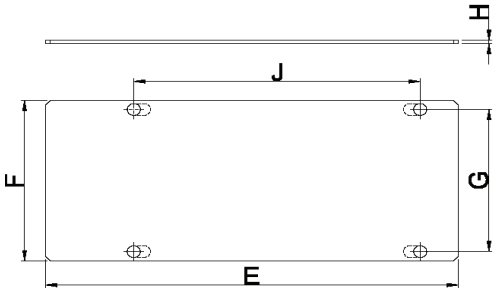

E..G3..					E..G5..					E..G7..					E..G8..				
mm.	E	F	G	J	mm.	E	F	G	J	mm.	E	F	G	J	mm.	E	F	G	J
	310	180	150	290		340	290	240	270		600	340	300	500		700	420	370	670
H.: 16					H.: 5					H.: 20					H.: 20				
Fixing Holes: Ø 11					Fixing Holes: Ø 15 x 10					Fixing Holes: Ø 12.5					Fixing Holes: Ø 12.5				